Spring 2006

Volume 19 - No 2

ISSN 1042-198X
USPS 003-353

SINGLE ISSUE
$5.50 USA
$6.00 CANADA
$8.00 ELSEWHERE

AMATEUR TELEVISION QUARTERLY

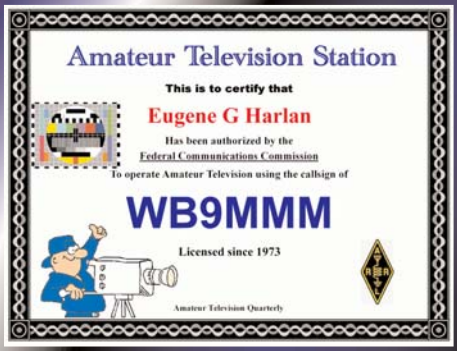

Proud of being an ATV'er?
Print your own certificate
to let people know!

ARE YOU SERIOUS? USE YOUR iPod FOR TEST SCREENS AND STATION ID

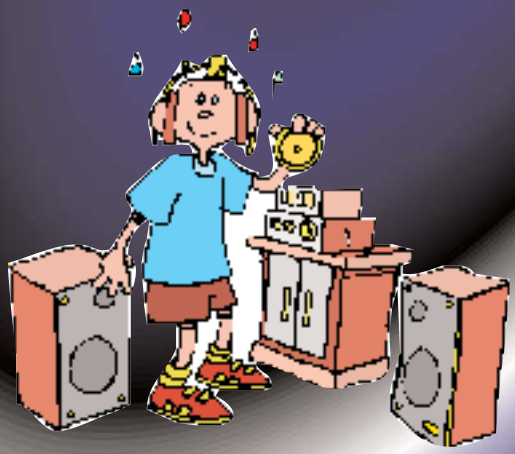

UNDERSTANDING AUDIO AND STEREO

P. C. Electronics 2522 Paxson Lane Arcadia CA 91007-8537 USA

Tel: **1-*626*-447-4565** m-th 8am-5:30pm pst (UTC - 8) Tom (W6ORG) & Mary Ann (WB6YSS)

24 hr FAX order line 1-*626*-447-0489 Email: Tom6org@hamtv.com

VISA MasterCard

See the Fun ATV applications at www.hamtv.com!

Antennas, R/C, Balloons, Rockets, ARES/RACES application notes, repeater design, DX and more

Get on ATV Quickly and Easily with our 20Watt ATV Transceiver

See it at Dayton Booth #207

TC70-20Sa
ONLY $579

Total unit price shipped within 24 hrs of your call via UPS surface in the contiguous USA, Visa/MC

A pair of these can really give an Emergency Operations Center a better feel for what is going on at an incident site - a must for any ARES/RACES group.

All you need for 420-450 MHz ATV in one box!

Transmits on all USA standard freqs of 439.25, 434.0, 427.25 or 426.25 MHz
Sensitive downconverter tunes the whole 420-450 MHz band to TV ch 3/4

Got the ATV Bug ?

≥20 Watts

P.E.P. output, adjusts as low as 2 Watts for driving 100 Watt Mirage D1010N-ATV amp or 225 Watt DEMI 70225PA amplifiers**.**

Made in USA.
Sales only to licensed Radio Amateurs and for legal Part 97 applications.

Coming Soon to a Ham Shack Near You -
The Downeast Microwave 70225PA
225 Watt 70cm Linear Amplifier

Model 70225PA has:

- All mode 225 Watt pep RF output on 70cm with 10-20 Watts drive, 50 Watts with1-2 Watts drive.
- Continuous Duty with dual fans.
- Runs on 26 to 32 Vdc at up to 20 Amps.
- 50 Ohm type N jacks

Price $560 with receive T/R bypass relays and **$495** without. Email us to get on the availability notification list. Orders will be filled on a first in / first out from this list. Get yours before the early summer tropo DX season. See our ATV DX Record web page - www.hamtv.com/atvdxrecord.html.

http://www.hamtv.com 4/2006

See the review and app note on our New in 2006 web page

GET EXTRA FIELD DAY POINTS*
with a portable Videolynx Transmitter

434 - 434 MHz 50-100 mW, video only, 9Vdc @40ma**.....$99**
Z70A - 50-100 mW, audio & video, 9Vdc @ 250 ma**....$149**
4 frequency 426.25, 427.25, 434.0, 439.25 MHz
VM-70A - adj up to >4W, audio & video, +11 to 14 Vdc**.....$199**
4 frequency 426.25, 427.25, 434.0, 439.25 MHz
* ARRL Field Day Rule 7.3.10 gives 100 points for a non-traditional mode. Demo to a govt. official and get 100 more.

VIDEO IDENTIFY
with an Intuitive Circuits Video Overlay Board

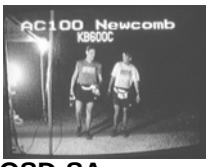

OSD-SA program characters with the 4 on board buttons**.....$119**
OSD-GPS program your call plus input data from a GPS rec**.$119**
OSD-PC program characters from a PC computer**.....$139**

These boards insert in the video line between your camera and transmitter for home, repeater, R/C or public service events. All have non-volitile memory. 8 to 14 Vdc @ 80ma, size 2.5 x 3.5".

Hams, ask for our free ATV catalogue or download from our web site - AM, FM, 70cm to 10GHz
Check out our *New in 2006* & *Specials & Surplus* web site pages regularly!

If You Move

Please send us your NEW ADDRESS! We pay 70 cents for each returned ATVQ. And we are usually nice and send another copy to your new address which costs us $1.29. Please help us from having to do this. Thanks!

AMATEUR TELEVISION QUARTERLY

Published by
Harlan Technologies

Publisher/Editor
Gene Harlan - WB9MMM

Regular Contributing Editors
Mike Collis - WA6SVT
Bob Delaney - KA9UVY
Klaus Kramer - DL4KCK
Tom O'Hara - W6ORG
Henry Ruhwiedel - AA9XW
Ron L. Sparks - AG5RS

Editorial Office
5931 Alma Dr.
Rockford, IL 61108
(815) 398-2683 - voice
(815) 398-2688 - fax

http://www.hampubs.com
email: **ATVQ@hampubs.com**

Amateur Television Quarterly (ISSN 1042-198X) is published quarterly, in January, April, July, and October for $20.00 per year by Harlan Technologies, 5931 Alma Dr., Rockford, Illinois 61108-2409. Periodicals Postage Paid at Rockford, IL and additional mailing offices. POSTMASTER: Send address changes to:
Amateur Television Quarterly,
5931 Alma Dr., Rockford, IL 61108.

Amateur Television Quarterly is available by subscription for $20.00/yr in the USA; $22.00/yr in Canada; $29.00/yr elsewhere. Single issues $5.50/USA; $6.00/Canada; $8.00 elsewhere.
Send all address changes to:
Amateur Television Quarterly,
5931 Alma Dr., Rockford, IL 61108

Amateur Television Quarterly

TABLE OF CONTENTS

Editors Notes

Well, getting ready for Dayton again. I wish that I could have more news about the ATV forum, but it just is not available yet. Seems they have moved forums around and we will have a different time this year. Make sure to check in at our booth, number 207, and we will provide details. It could be on Friday, so check early!

I have had a little fun putting together an ATV certificate that you can make yourself to let the world know that you are proud to be an ATV'er. Check out our web page in the ATV section and make your own (FREE). I plan to also do some ID screens and am open to suggestions for other ideas that these may give you.

I guess it is that time of year to work on antennas. Our Wilson tri-band beam has been up for 20+ years and it has either vibrated in the wind enough to have the tail end come loose or something has broken. With 53 lbs of weight to it (I still have the manual!), I am not looking forward to taking it down. We are going to have a good ground crew to manage getting it down in one piece. Before getting it back up, I plan on putting on a load bearing that I wished I had when I put it up originally. I've already borrowed a gin pole and just need to get a good Saturday and lots of friends!

The ATV repeater here in Rockford, IL, is still working OK but needs users. A couple are getting close to getting on.

I was hoping to hear a good final outcome of a balloon launch from WB8ELK. It appears that his balloon was found by a group of drunk college kids. Bill said, "....I saw that it appeared that the balloon had landed in a parking lot near a technical school south of Thomaston, GA.....a few minutes later, my cell phone rang and some very drunk students called me asking how much the Reward was....." He continued, "They said the balloon (they called it a big- a@# trashbag) was tangled up in a tree and shredded but they found the payload sitting in the parking lot behind Flint Technical College south of Thomaston, GA (south of Atlanta)."

"Several drunk people passed the phone around and asked me questions about it. Hopefully after the hangovers tomorrow, they'll call me back and I can arrange to retrieve it."

Bill, we wish you all the best in getting that one back!

I hope to see many of you at the Dayton Hamvention.

Gene - WB9MMM
ATVQ

Understanding Audio And Stereo

By Henry Ruhwiedel - AA9XW Email: a9xw@cs.com
5317 W. 133rd Street
Crown Point, IN 46307

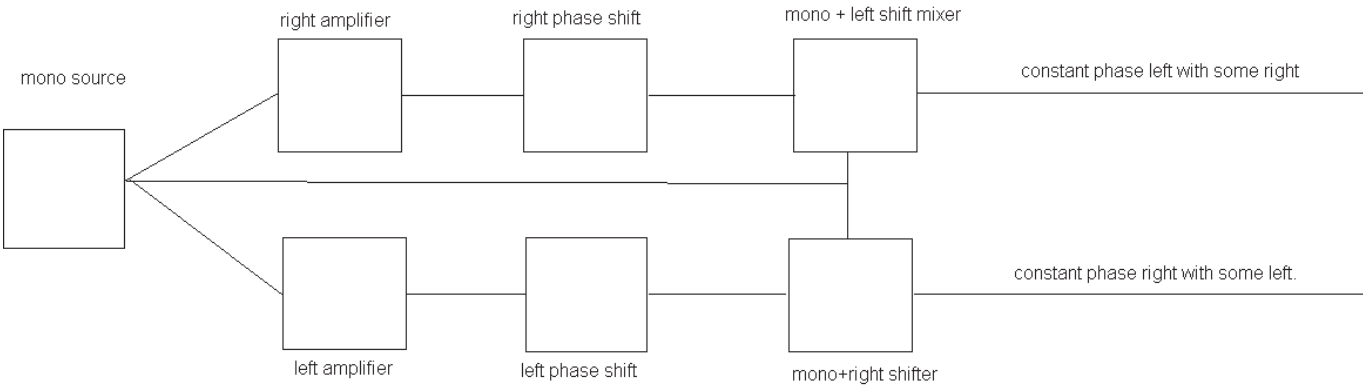

Back when radio was mono and TV was black and white, audio was reasonably simple, proper microphone placement to capture each voice or instrument, a console to mix the result to one channel, and a tape or wire recorder at 15 to 60 inches per second or a vinyl cutting disk to preserve the output. But our bodies have stereo receptors (ears) and as we desired more realism, stereo records were introduced, then binaural radio broadcasts, then multiplex FM stereo, a multitude of AM stereo, finally multiplex television stereo, and then digital discrete stereo-surround with up to 8 channels, 5.1 for TV and 4 to 8 for theatrical presentation, and toss in SDDS, THX, Dolby digital and other processing for up to 12 channels.

Our brains determine the location of sound by the time interval difference between our two ears. That interval is about 9 inches. At roughly 1,100 feet per minute, 132,000 inches per second at sea level, that is about .8 milliseconds. That works out to about 1,050 Hz as the resonant frequency of our ears space. This happens to fall in the range of greatest sensitivity on the Fletcher-Munson curve. At low frequencies the wavelength is too long, and at very high frequencies the wavelength is too short to be resolved by our brains. For most people, sounds around 150 Hz and lower are difficult to resolve (position) so sub woofers and center channel speakers provide the bass response in your homes, which is the .1 in 5.1 surround sound. Also called the effects channel. At frequencies above 5,000 Hz, the sounds are mostly harmonics, not fundamentals, which add tonal quality, but the wavelength is too short to accurately resolve position. Under water, sound travels about 5 times faster, which is why it is even more difficult to resolve locations of sound under water, with a 1000Hz wavelength of 1.6 milliseconds.

There are many variances on multi-channel and stereo recording. Various microphone placements being coaxially located (on the same vertical axis but aimed at 90 degrees), head to head (a small horizontal separation), two microphones placed 9 inches apart (binaural placement), and microphones with wider placements. Additional mics in close proximity to voices or instruments allows a more flexible multi-track recording for later mix down. One studio I built has over 140 inputs and takes three people to operate. A complete 2nd mixer with 96 inputs is used for the sound reinforcement for the audience (also known as a house feed).

The first attempt to achieve spatial separation was a binaural sound system. Binaural means two separate sound channels, no mixing. Typically, the performance was produced using 2 microphones, left and right, or two mixers with multiple mics, the out of one mixer being left and the other mixer being right. The left

channel was then broadcast over one station (AM, FM, or TV) and the right channel was broadcast on a different station (AM, FM, or TV). You tuned in one channel on one receiver, and the second channel on the second receiver, and placed the speaker of each a few feet apart in your viewing/listening area. The space between the speakers placed the left sound on your left and the right sound on your right. This produced two point sources, with nothing in between or beyond left and right. Because our right ear receives the sound from the left speaker a little later and our left ear hears the right speaker sound a little later, some central (between the speakers) effect was realized. This gave mostly ambience depending on how much of the "other" channel each microphone picked up.

Stereo records followed early mono records. In the early days, records were made with horizontal movement, or vertical movement of the cutter. Eventually vertical recorded records fell out of use because on loud sounds, the grooves on one side could cut through to the grove on the back side, making a hole, or the grooves on one side would distort the recording on the first side because the soft material would be pushed and being thin, would be a dimple on one side and a bump on the other. Early attempts to make stereo records used horizontal and vertical cutting heads to get two channels (binaural) recordings. On playback, two needles would feed two amplifiers/speakers to produce two channels. One major problem was that the vertical record head and horizontal record head had cone shaped styli. That meant the deeper the groove, the wider the groove. So each playback needle was also responding to the 2D dimensions of the composite groove, not just the 1D made by the cutter. Tape did not have this problem since audio tape can have discrete tracks for each channel. Yes, there was an effort to have two parallel grooves, one for horizontal and one for vertical, but that also meant two arms on the turntable, so each could track its spiral without interference. There was even an effort to place two platters on the same turntable, one above the other, with separate arms and cartridges, not too bad until one skipped a groove. Vertical was also more sensitive to noise from dirt in the grooves since it had to ride on the bottom, while the horizontal needle rides on the sides of the grooves.

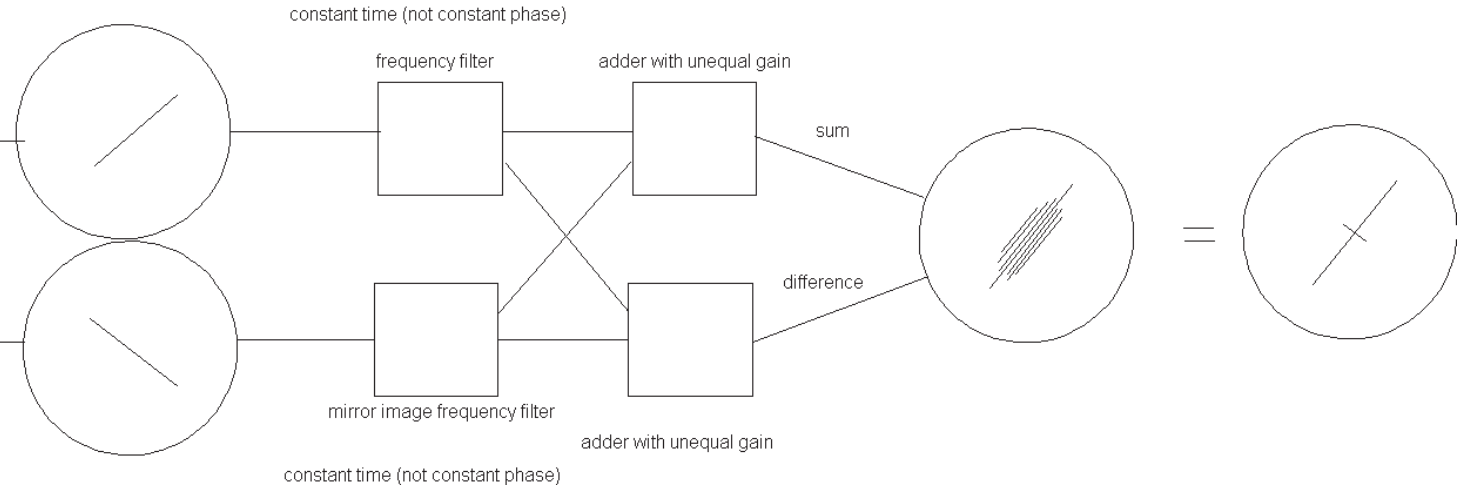

Enter multiplex recording. By making a phono cartridge with two (or 4) coils and magnets, (moving coil or moving magnet), and moving the cutting heads 45 degrees allowed one channel to be recorded on the left groove wall, and the other channel to be recorded on the right groove wall. That also provided stereo since both walls would move the needle in two axis, and anywhere in between. In mono, the needle essentially moved up and down, and in stereo, left right and up and down. This physically accomplished a multiplex (mixing) and allowed a sound to appear to be anywhere between the two speakers. Badda bing, badda boom, stereo mixing was accomplished and studios

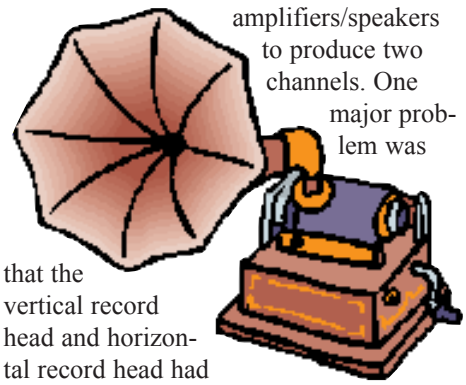

rushed to get into the business of stereo. But there was a huge archive of single track (mono) recordings. Ah, electronic trickery to the rescue. If we take a mono sound, and duplicate it into two identical signals, we can time delay (phase shift) one channel. If we use a constant phase delay (variable time) we can advance or retard one channel relative to the other. This is mixed together. If we take the same two signals and subtract one from the other and mix them back together we get a second time delay. If we take the non-delayed signal it still represents the mono sound, but the difference signal represents a time and phase shifted signal. The time and phase relationships are what our ears hear as stereo. The two time shifted signals can also be

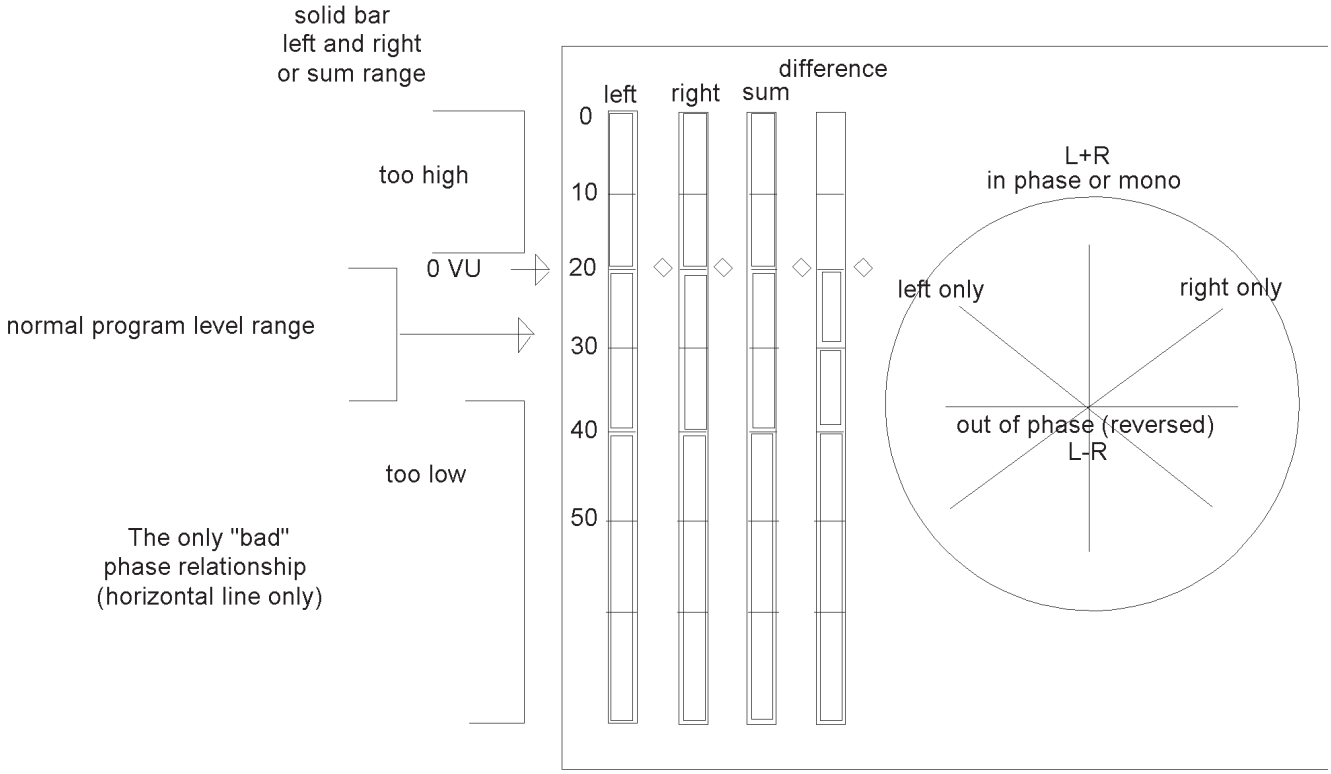

sum should be higher than difference
sum should normally be 20 dB
or more than difference

In stero audio, the "fuzzball"
along the vertical, (green arc)
represents the sum L+R signal
and the fuzz ball along the horizontal
represents the L-R difference signal.

The tilt represents
amplitude differences
the width of the elipse
represents phase differences.

Synthisized stereo is mixed off center
to the left or right in order to
generate a sum and difference
signal compared to mono. The matrix
is tilted to create one "side" and
the original mono signal is fed out
of phase and amplitude to create
the other "side"

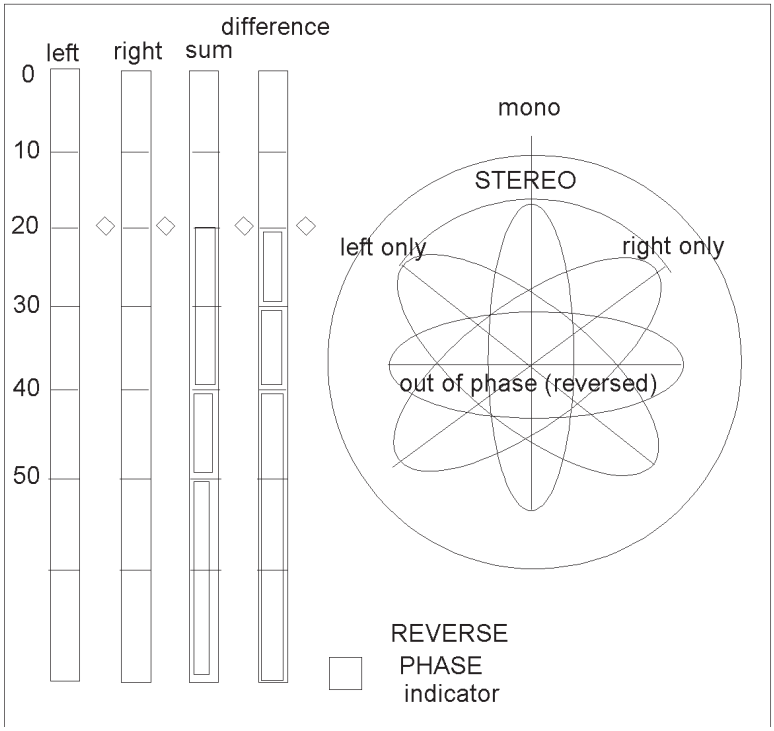

used to act as a comb filter, canceling some frequencies on one side and canceling the opposite set of frequencies on the second set. Or we can make a frequency separation circuit and adjust the points where the sound moves from left to right and back depending on the frequency. We have now created stereo from mono. This same process is used in transmitters to eliminate one sideband, known as phase cancellation.

Various stereo enhancement systems, Dolby C for example, use the same phase and frequency separation process to "enhance" the stereo effect to produce surround sound and other multi channel systems. Their processes are just more sophisticated and complex.

Multiplex broadcasting takes the audio and creates, for FM and analog TV, a subcarrier that carried the difference signal. The main carrier carries the sum (mono) channel. In the receiver, the signals are de-multiplexed to drive each channel speaker-amplifier. TV sound also incorporates compression and decompression, and TV and FM also include various pre-emphasis techniques to reduce noise more on the lowly modulated difference signal, than the fully modulated sum channel.

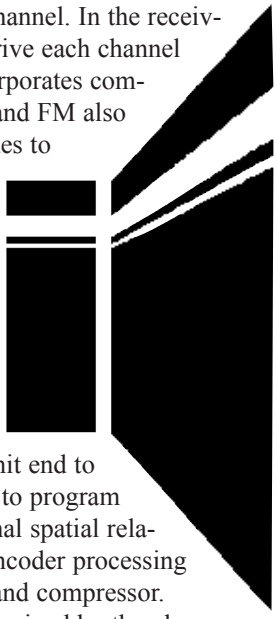

Digital stereo is sent as discrete (back to binaural) audio channels. In the receiver, there is a Dolby decoder that takes the two - six signals, and creates 2, 3, 5, 6 etc. matrix channels. There is a Dolby encoder at the transmit end to send data to the receiver to tell it how to program the receiver circuits to make the original spatial relationships. In digital TV there is also encoder processing that regulates levels, acts as a limiter and compressor. Locality of the sound you hear is determined by the phase, time and amplitude differences between the speakers.

With the digital TV age upon us, there has been a growing differential between channel "loudness" with some broadcast and cable channels being in analog, some digital, and not everyone is using the "receiver reference level" as it was intended. In DTV, the processing includes a reference level that is supposed to equalize the levels between programs, commercials and other stations so that we don't grab the volume control while changing channels. Unfortunately the old AM/FM loudness wars have been picked up by some TV stations, and the encoders are being set for maximum gain, and no loudness control, which is counter to the design of the DTV audio system. As a result, some DTV stations are louder than others and the consumer is being cheated from a valuable technical advantage of digital sound. Many have also noticed there is a spatial difference on the same program between analog and digital and the loudness differences do not correlate to measurements using a variety of level, loudness and frequency measurement devices. We are still trying to measure what our ears hear and our brains decode and finding sound measurement is not always the what we hear.

ATVQ

Announcing the Great Plains Super Launch in Hutchinson, Kansas

The Project: Traveler balloon group in Hutchinson, KS will be hosting this year's annual Amateur Radio High Altitude Ballooning (ARHAB) Super Launch in Hutchinson over the weekend of August 4th-6th, 2006. Around ten high-altitude balloons carrying amateur radio and other scientific instrumentation will be launched into the upper atmosphere by amateur scientists from across the nation.

Events begin on Friday with the conference being held at Grand Prairie Hotel & Convention Center. A variety of ballooning and scientific topics will be discussed by community experts in the field from 8am to 5pm.

Saturday morning will start bright and early with a mass balloon launch from somewhere in the Hutchinson area (the exact site will not be determined until Friday afternoon due to ever-changing flight trajectories). Liftoff should occur by 7:30 am, depending on location and forecast winds.

The events are open to anyone interested in ham radio or amateur weather ballooning. A $5.00 admission is required for all attendees of the conference on Friday. There are no charges for attending or chasing the balloon flights on Saturday. For more information, see the GPSL website at **www.superlaunch.org**. Sunday, August 6th will be reserved as a backup flight day in case of inclement weather.

ATVQ

Zack Clobes, W0ZC - **zclobes@swbell.net**

Receiver Pain From Too Much Gain

By Henry Ruhwiedel - AA9XW Email: a9xw@cs.com
5317 W. 133rd Street
Crown Point, IN 46307

Your preamp may not be helping as much as you think; it may actually reduce your ability to receive weak signals.

Ah noise; there is the rub. To find that elusive signal in the noise takes skill, good equipment and antennas. But you may have too much of a good thing. Unfortunately, we are all limited by the familiar notion that noise increases with temperature and bandwidth. In theory, if we could have a zero degree Kelvin RF amp and an infinitely narrow pass band, we would have the ultimate receiver, able to recover any signal. Lacking Arecibo type equipment, with fraction of a degree K noise temperature, a really nice G/T ratio, and sliver thin digital signal resolving power, we opt for the next best thing but is that really optimum?

We know we can receive signals below the 270 degree Kelvin terrestrial noise floor. Every satellite receive system has an amplifier/converter with a noise figure in the under .5 dB Ku band (12 GHz) and under 20 degree C band (4 GHz) ratings. We can get cheap ham preamps for 70 CM and most other bands with impressive noise specs and typically 18-20 dB gain. When we say low noise, it actually means the amplifier input noise level is below the galactic noise level. But the term is often sloppily used to simply mean the amp is lower noise than our receiver.

Lets look at a typical receiver system. The receiver has a spec of 1 uV or better depending on bandwidth. For TV, the ultimate noise floor for 6 MHz bandwidth is 1.1 uV. That is the noise-limited threshold of reception. Signals above that we can receive, and signals below that we cannot receive. But the receiver also has an AGC circuit. There is a threshold, typically 100 uV where the AGC begins to reduce gain, and a saturation point usually in the .5 to 1 volt range. As the signal increases above the AGC floor, the gain is reduced to prevent overload of the IF and video/audio amplification stages. In FM modulation we reach the limiter saturation and no further increase in signal will make any difference. In amplitude modulation, once we reach the full depth of modulation, we get no more improvement.

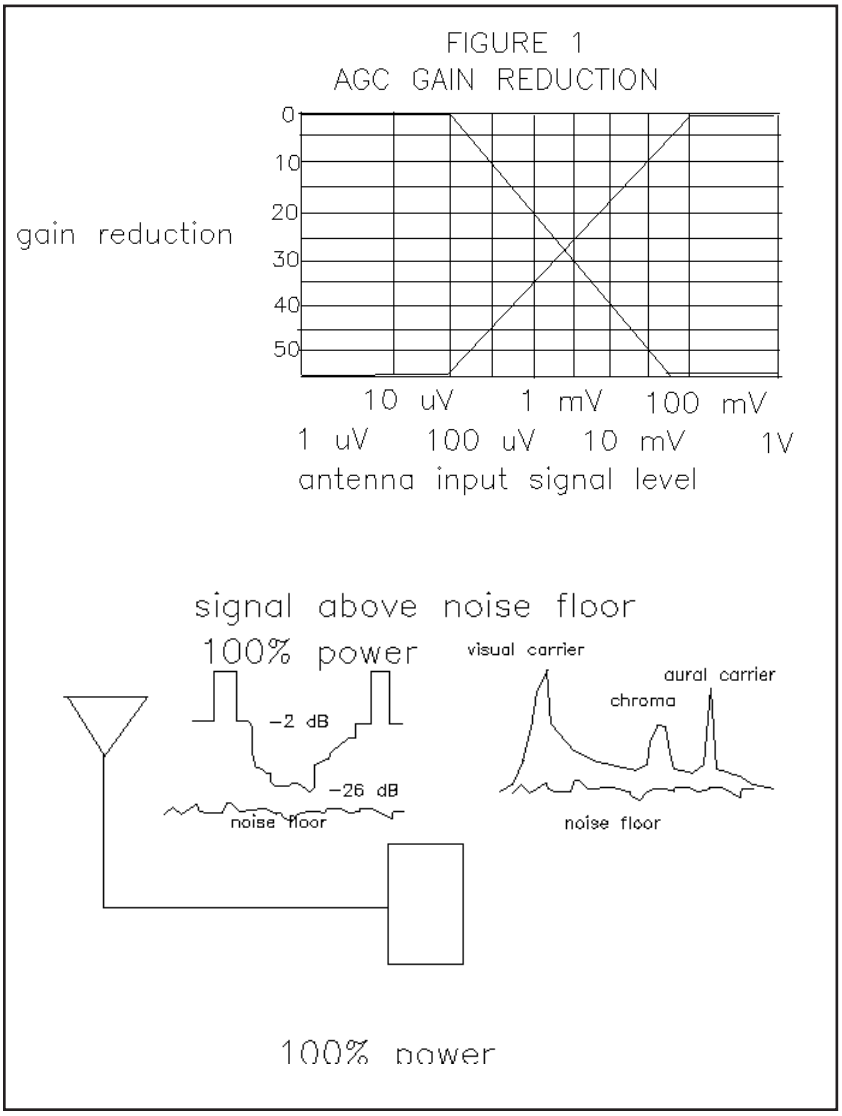

Lets look at figure 1 and use a typical TV signal for the source. As the signal level increases it reaches the threshold of the AGC. Further increases in signal level create equal amounts of gain reduction over the range of the AGC. The result is the output of the circuit remains constant along the AGC range, and there is no gain reduction below threshold, and any level above the upper limit simply begins to overload the circuits.

We can look at this vs. a video signal in a similar manner. Using a long time constant, the AGC will change with the signal level in order to maintain a constant gain structure so the picture on the CRT, LCD whatever, is within the dynamic range of the display device.

Now lets add a noise floor. In figure 2, we have chosen a noise floor of about 1.1 uV. It is below the AGC level, so it has no effect on the system gain. So lets add some coax loss, and a preamp. Figure 2 shows the result. The coax loss is added dB for dB to the noise floor of the receiver to make the effective sensitivity much less. The preamp may be equal or better as the receiver at its input depending on its noise floor. Noise and signals passing through the preamp are

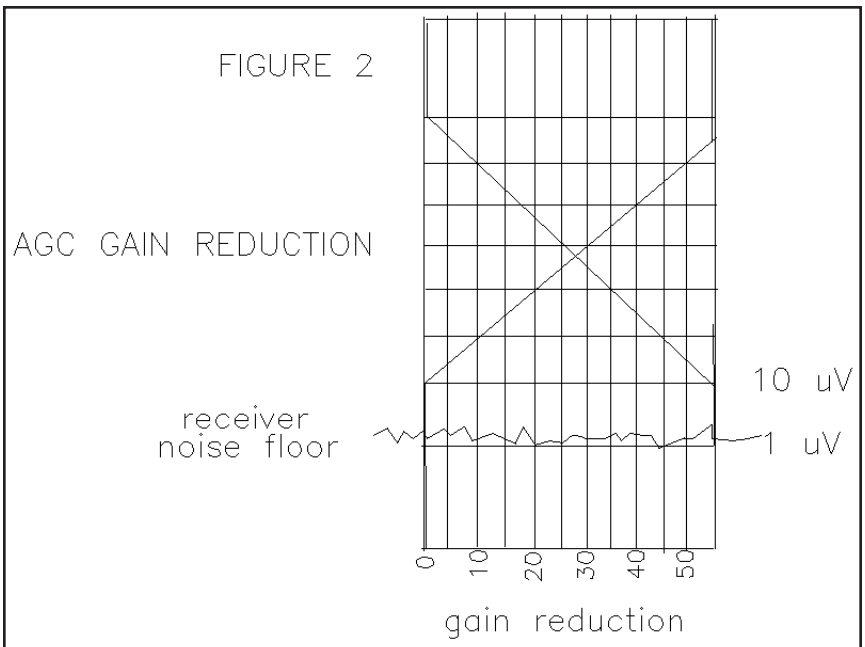

any improvement the preamp sensitivity/noise level has compared to the receiver sensitivity/noise level. The more gain we introduce, the more noise appears at the receiver, with no additional gain in signal to noise ratio.

We can determine the pad loss needed by measuring the signal at the output of the receiver, and with no signal present, we should see noise. If we see more noise with the preamp on, we need to reduce the signal until we see no change in noise level, or a very small increase in noise. There is an additional gain in added loss because the RF devices have a third order intermediation point. If we have a very strong signal, and we have too much gain, the signal will cause IM to be generated in the receiver, which results in interference, more noise, and your ability to find the weak signal is masked by the IM and gain reduction from the now non linear amplifier stage. But IM products are reduced by the cube when the signal is reduced. A loss of 3 dB in input level equals a 9 dB reduction in IM.

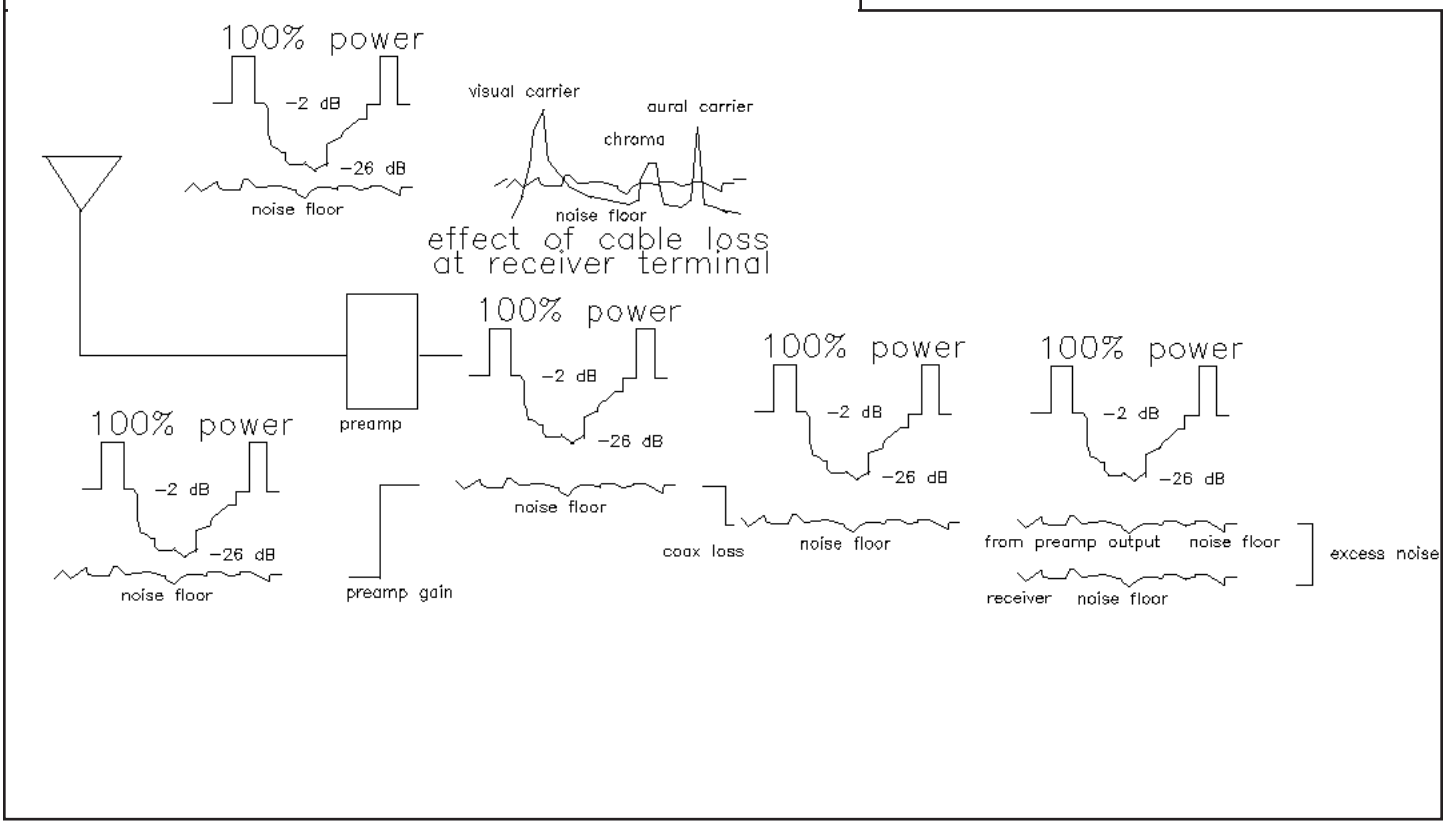

amplified equally. Lets say 20 dB. If we have 6 dB of coax loss, the first 6dB of gain over comes the coax loss, but the remaining 14 dB gain has raised the noise signal at the receiver by 14 dB! That may be enough to cause the AGC to begin gain reduction. If the AGC puts in another 3dB of gain reduction, the signal and noise is reduced by 3 dB, but the noise level out of the preamp is still above the noise floor of the receiver. We have 11 dB more noise. But if we insert 11 dB of RF pad, the noise floor of the signal from the preamp, will be equal to the receiver noise floor, and there will be no gain reduction, and the signal sensitivity at the preamp input is now fully realized at the receiver. We have gained 6 dB of signal by eliminating the coax loss, plus

If we look at the signal over noise floor diagrams, we show the S/N ratio with a signal above the noise floor. As the signal goes through the coax, the signal is lost but the receiver noise floor is unchanged, so the signal is now partly below the noise floor. Since SYNC is 100% power, it is the first part we see above the noise on a weak signal, about 2 dB = P1 visible sync bars. Video is AM modulation, and the depth of modulation changes with video level. At peak white we only have 12% power, well

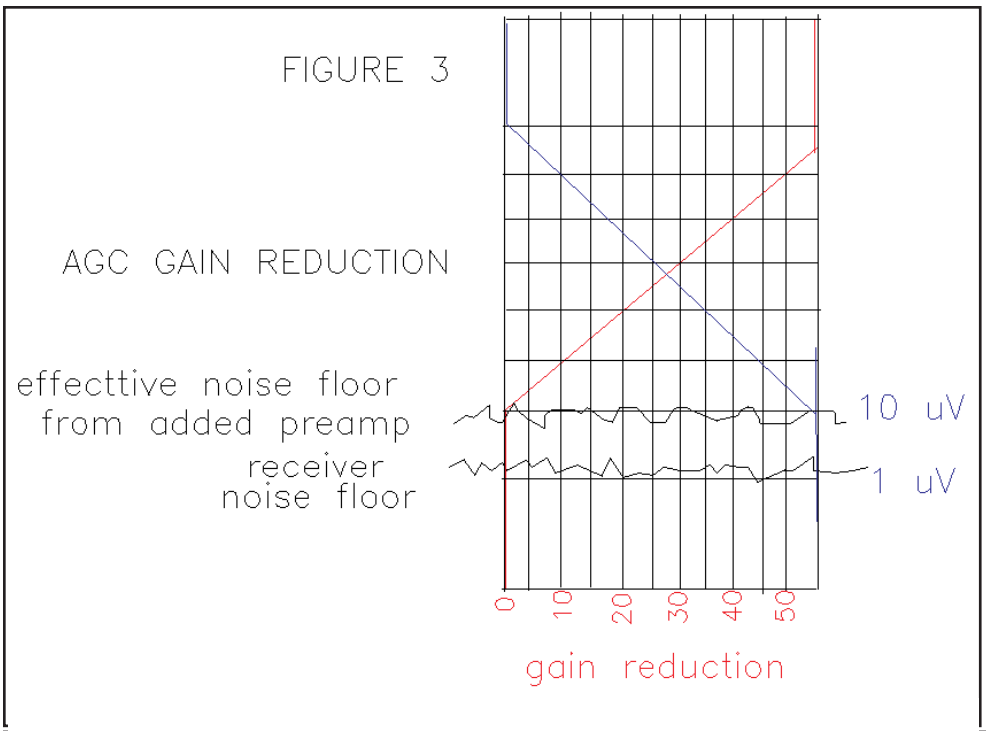

the amount of signal recovered because the lower power sidebands are now above the noise by the same ratio. We can actually reduce the bandwidth by a factor of 4, since most of the video information is in the first 1.5 MHz. We can also get a similar affect by limiting the base band video to filter out the noise, and that does not affect the color or audio which are reduced if we use RF or IF bandwidth reductions. Use of a VHF or UHF "intercom channel" i.e. 144.34 reduces the need to recover the audio on the video signal and we can also use on-carrier FM for audio. Also, depending on the shape factor of the bandwidth filter, the stronger color and aural carriers may still be above the noise enough to get through.

A little extra loss can be a good thing!

ATVQ

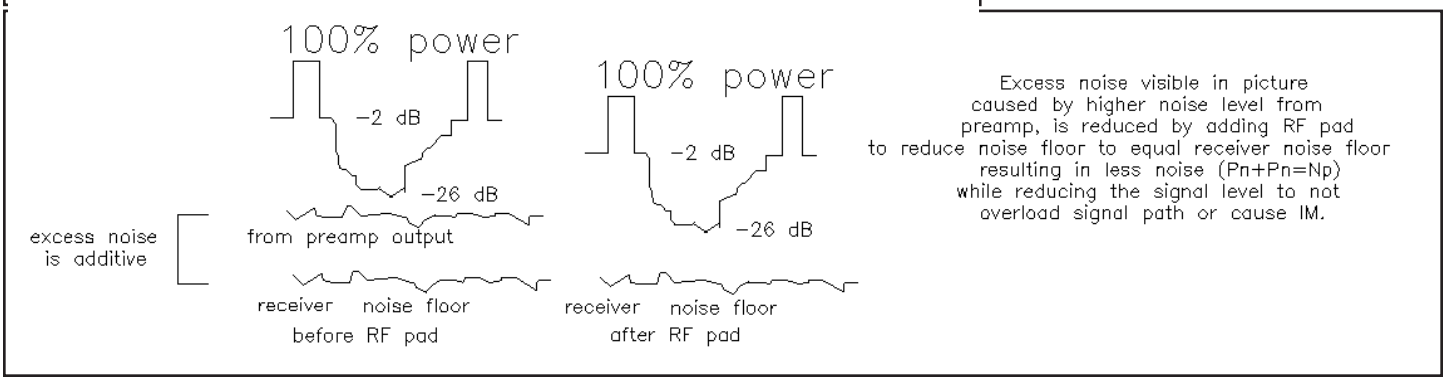

below the noise floor in our diagram.

Now lets add the mast-mounted preamp. The preamp amplifies the signal, it has its own noise floor, which is also amplified, so both signal and noise are higher out of the preamp. Following along, we subtract the coax loss, which is less than the preamp gain, and at the receiver we have a signal and noise that is above the receiver noise floor. Noise power is additive. The power of the noise from the preamp adds to the power of the receiver noise, so we have more "front end" noise, but also more signal. But if we then insert a pad to reduce the levels, both the noise and signal are reduced, but when the amplifier noise floor is reduced to or below the receiver noise, the noise is no longer additive, so we have an increase in S/N ratio because the noise power is reduced. Less noise in the receiver means the AGC is not affected by the noise power, and we are back to maximum sensitivity. If we cascade preamps, we generate even more noise, (Pn1+Pn2+Pn3) and thus more reason to add a pad before the receiver to reduce the additive nature of the noise and reduce the noise power at the receiver so it does not trigger AGC gain reduction.

On weak signals, we can see that the bandwidth of the recoverable signal is less than 6 MHz wide. If we reduce the IF or RF bandwidth, we reduce the noise power by 3dB. This increases

North American ATV DX Report

By: Bob Delaney - KA9UVY - Email KA9UVY@hotmail.com
10630 N. Delaney Lane
Mt. Vernon, IL 62864
DX Hotline 618-242-7063

As you may have noticed this column has a new name this issue and it is my intent to widen it's scope. ATV DX can and does happen in all parts of the country and I encourage anyone working DX to send me a report.

Remember the term DX applies to any contact that you feel wouldn't have been possible under everyday circumstances. Depending on where you live a 50 mile 2-way could be a real accomplishment and something to be proud of.

Here in the Midwest we wait for the summer Tropo season but in the East or West you may be getting ready for a Mountaintop expedition. If you plan to operate ATV from some exotic location or from an airborne vehicle please let me know. Since there is a 3 month span between columns I will post the information to the ATV Activity page to help you be successful and once your expedition is over please submit a report.

Looking Back:

Since the bands have been so poor for DXing except in the deep south this months column will look back at a fantastic contact that took place on May 30th of 1985. I found the information on this contact in an old Spec-Com magazine purchased via e-bay. I purchased the pile of A5 and Spec-Com magazines for 2 reasons. Reason #1 because I did not get involved with ATV until 1994 and ATVQ had by then replaced these publications.

Reason #2, I wanted to see if anyone was seriously working DX back in the Good Ole Days and what if any distance records may have been established.

It felt a little like Christmas when the big box arrived and I couldn't wait to get a look at the gear and techniques used back in those days. It didn't take long to see some of those familiar callsigns, many that I have worked and are still active and unfortunately many who are no longer illuminating our TV screens with their presence.

To be honest I still haven't had the time to comb through all of the information but something great caught my eye in the Vol 15 No. 5 July issue of Spec-Com. A report of a 937 mile ATV 2-way QSO !! It seems that somebody did in fact take advantage of the terrific propagation across the Gulf of Mexico (the only path that opened this winter) and made a 2-way video contact from Florida to Texas!

ACROSS THE GULF ON ATV!! 937 miles
TROPO CLASS A USA RECORD FOR 70CM

The two stations involved were Frank Davis, W5VDS, of Wimberly, TX and Charles (Red) Seal, WA4GRK, of Pinnelas Park, FL. The record QSO took place from about 03:16z to 03:35z about 20 minutes total with up to P-3 signals both ways. During those days video equipment for recording was not nearly as easy to come by as it is now and I am not sure any video exists of the contact. Spec-Com actually received a letter from each amateur involved detailing the contact and the equipment

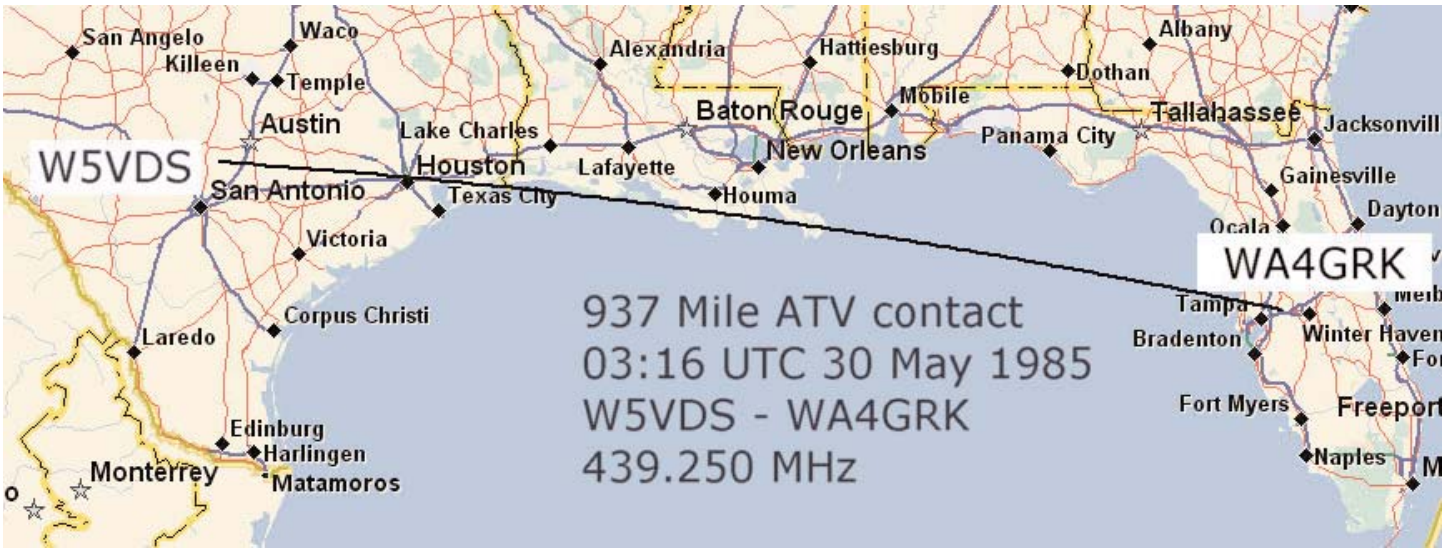

used. In fact the first report of this record contact was received via 20 meter SSTV! Yep, no internet in the good ole days either but these two Amateurs had the tools and drive it took to set a record that may indeed never be broken!

The equipment used on the Texas end of the QSO was as follows:

W5VDS EM00wa

TX: PC Electronics TC-1 with a Mirage D1010 running 90 watts pep output
RX: Modified UHF TV tuner with an ARR GasFet Preamp
Antenna: 70 mbm 88el JayBeam @ 56 feet fed with 7/8" Andrew Hardline

The Equipment used for the Florida end of the QSO was:

WA4GRK EL87pu (approximate location)

TX: PC Electronics TC-1 into a Mirage D24 running only 30 watts output!
RX: TC-1/PC Electronics Downconverter
Antenna: Four 11 element homebrew MBS yagis @ 70 feet fed with 9913

The antennas on both ends were both horizontal and Red, WA4GRK, even commented in his letter, "Get off those verticals guys...The stuff is out there to be had!"

The article in Spec-Com also had some details regarding what each of them saw in each others shack etc. They coordinated the QSO on 144.120 ssb and I can only imagine the excitement of both parties involved!

NOTE:
In researching this record setting contact I tried to reach both parties involved but time is a barrier that none of us can overcome. I did find the son of Frank Davis, W5VDS, and he informed me that the years have caught up with Frank. He is no longer able to be active in amateur radio and now resides in a nursing facility. His home and station is still there along with many QSLs and videos of his ATV operating days. His son Frank Davis II (once licensed as WD5EEE but now inactive) was able to get me a copy of the historic QSL card for this contact!

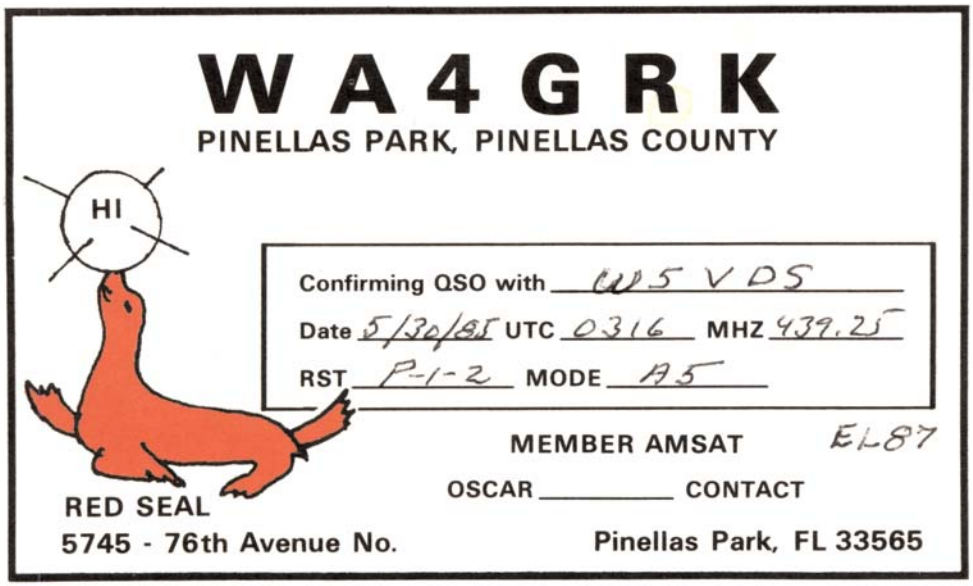

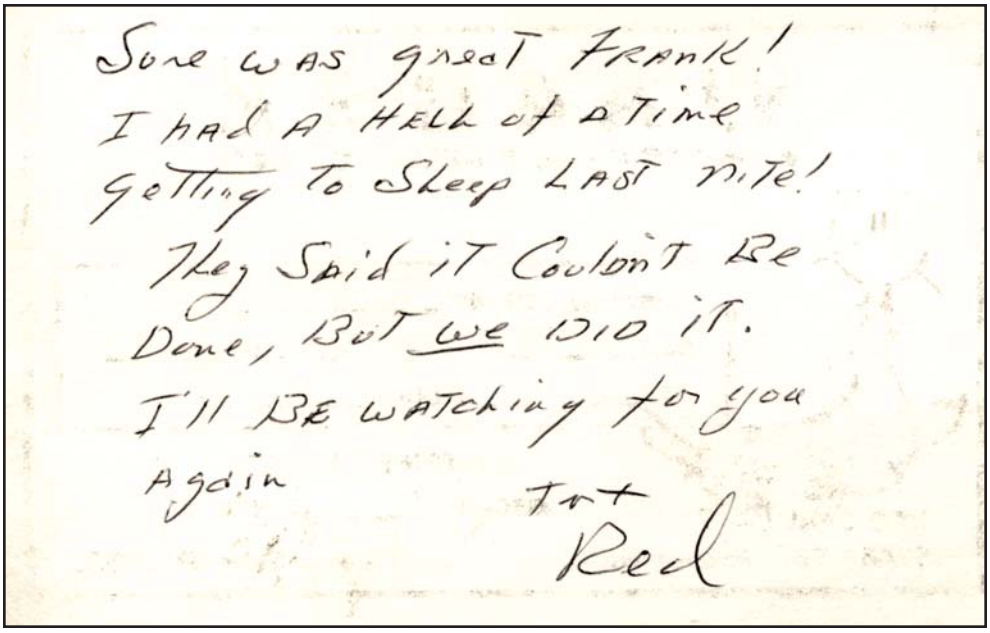
Sure was great Frank!
I had a Hell of a Time
getting to Sleep Last nite!
They Said it Couldn't Be
Done, But we Did it.
I'll Be watching for you
Again
73
Red

Don't you just love the comments on the back? I Wouldn't have been able to sleep for a week!

Frank is also looking for any video or pictures that may exist to this day.

I have been unable to find any information on Charles (Red) Seal, WA4GRK, and his license shows expired as of 2005 so I fear the years may have caught up with him as well.

If you have any information on Red, WA4GRK, please let me know! I would love to talk with him about this fantastic contact.

Also thanks to Spec-Com for recording this event for future generations and providing details of the contact.

Thanks to Flip, N9AZZ, for help with the path map.

A special thanks to Frank Davis II, ex WD5EEE for going through his fathers

vast QSL card and video collection searching for information here in this column.

ABOUT THE DISTANCE: I have looked up the grid and sub-grid for both parties (shown here) and calculated the distance with bearing and distance. It came up with about 945 miles. Since there is a possible error of around 6 miles or more using grid/sub-grid calculations and since they computed the distance at the time with min, deg, sec I decided not to modify the claimed distance.

Looking Ahead:

The bands are sure to open in the coming months and I hope that we are all prepared to take advantage of Mother Natures gift. We have much better gear available: Better antennas, more sensitive receivers and higher power than were used for the record setting QSO detailed above. We also have instant scheduling tools via the internet and propagation monitoring has never been simpler. What we seem to be lacking is that good ole Amateur Spirit! The 'CAN DO, LET's TRY IT!' seems to be rare these days indeed. Since I have been involved in ATV, I have been unable to find anyone willing to sked for ATV in Florida or Texas! The Gulf path is open much of the year and it seems a shame that only the ssb and cw operators are taking advantage of it. The main obstacle in working DX on ATV is simply lack of operators and enthusiasm. The propagation though rare does come and we simply don't take advantage of it!

Any record is breakable and many of the higher ATV bands are wide open for a record attempt. Let's get going and maybe during the ATVQ Summer Contest establish and or break them all!

When you do make a DX contact please let me know so that it can be recorded here in ATVQ for all of us share in the excitement that only a True 2-way Fast Scan ATV contact can bring!

Important DX Info:

The new ATV DX Record page at P. C. Electronics:

http://www.hamtv.com/atvdxrecord.html

If you have done better, be sure and send your information to Tom at P. C. Electronics. Let's hope we see those records grow this summer!

The Hepburn tropo forecast page has a new URL and is now at:

http://home.cogeco.ca/~dxinfo/tropo.html

If you are online you can post ATV CQ's and reports to the New ATV Logger page:

http://dxworld.com/atvlog.html

ATVQ

ATVQ In Amateur Radio Newsline

RADIO READING:
HOW TO PUT UP A TALL TOWER AND ANTENNA

If you are thinking about approaching your city or town for a permit to erect a tower and cannot quite figure out the best way, then you will want to read the Winter 2006 edition of Amateur Television Quarterly magazine. In an article titled **"So You Want To Put Up A Tall Tower" author Henry Ruhweidel, AA9XW**, takes you through the ins and outs of dealing with licensing authorities and how to deal with them in a way that will likely bring you the permit you desire.

They key to success says AA9XW is to present a professional appearance and convince others that you are informed. He explains what documentation to have ready at variance hearings, how to present it and much, much more. As such it's a must read article that anyone planning a tower and antenna installation.

Amateur Television Quarterly magazine is by subscription only and not sold on newsstands. Subscription information can be found in cyberspace at **www.hampubs.com** or by e-mail to **atvq@hampubs.com**. (Amateur Television Quarterly) ATVQ

Thanks to AR Newsline and Henry for the article! - ATVQ

What Can You Measure?

By Henry Ruhwiedel - AA9XW Email: a9xw@cs.com
5317 W. 133rd Street
Crown Point, IN 46307

I've had several articles in recent ATVQ about measurements, coax and such. How we measure things is often a discussion among engineers, and a recent DTV seminar by Gary Sgrignoli who invented DTV (holds many patents from his work at Zenith) focused on measuring aspects of digital TV, which was the inspiration of some of my material. One of my broadcast friends put it this way, "My physics professor used to say that the only fundamental electrical unit is charge. Everything else is a derived measurement. "What is the strength of the charge (charge gradient, or voltage), what is the rate of movement of charged particles? What is the volume of charge movement? What is the resistance to the movement of charge?" The central point is the only thing we can measure is voltage. Everything else is derived from that one parameter, including resistance, amperage, power and complex impedance.

Charge was first described as the force that caused tiny gold leaf material to spread open as pages in a book. The early glass bell Leyden jar would display a state of charge or no charge depending on the angle of the gold foil connected to the top connector. The static electric charge displayed had no measurement value, simply a state of charge or discharge. Since there was no circuit, there was no electrical flow. Because glass is such a good insulator, the charge would stay on the foil for a long time, until it slowly leaked away through the dielectric medium (air). It was in fact a condenser and called such because the theory was the terminal condensed the ether into a charge that was then stored in the foil. Today, condenser and capacitor are interchangeable terms.

The Volt became the standard value for electrical charge named for Voltaire. From there, everything else is derived. The Ampere is defined as a number of electrons that pass a given point in one second, or if we use the NIST standard, "a current that passing through a pair of parallel wires of negligible cross section and infinite length set 1 meter part that produces a field of 2 x 10-7 Newton per meter of length." [Standard adopted in 1948] The Ohm is derived as the resistance necessary to generate a charge gradient of 1 volt at a current of 1 amp (or dissipate 1 watt/sec). Every term we use is derived from the standard volt. Voltage is the only characteristic we can directly measure. The NIST defines an Ohm as A/V, and a watt as J/s (Joules per second). Somewhere I misplaced my N/M meter, and my Joule meter.

Every meter we use today is a volt meter or a derivative of a volt meter augmented by calibrated scales, calibration resistors or time constants. The scales may be calibrated in many other designations: VU, amps, ohms, but these are all derived measurements based on certain assumptions about equivalent circuits. The meter itself will change a circuit because it becomes a parallel element. The internal resistance of the meter affects the circuits we measure, and must be accounted for when calibrating the meter itself. The invention of the FET and very sensitive meter movements, has made the meter itself less of a disturbance, but will still change the circuit values.

Let's take a simple series circuit, a battery and a light bulb. The bulb has a certain resistance, let's say 100 ohms. If our volt meter is placed across the bulb, it becomes a resistor, parallel with the 100 ohm lamp. If our meter is also 100 ohms, the current now flows half through the bulb and half through our meter and we have an equivalent circuit of 50 ohms. We can compensate for this by calibrating the scale. Being a simple series circuit with two parallel resistors, means the voltage across the lamp has not changed, since one side must reflect the battery voltage and the other side "ground" so the voltage developed is equal to the voltage supplied. Our assumption is there is no power lost in the wires and the battery has zero internal resistance.

Now let's remove the lamp. Now we are measuring the open terminal voltage of the battery. There is no load except our meter. If our meter is still 100 ohms, and the volt meter says exactly the same, then we can state that the internal resistance of the battery (source) is zero. We know that is not the case in real life. All sources have an internal loss which we express in ohms of resistance or impedance. We measure that by measuring the voltage difference between load and no load conditions. If we replace the 100 ohm meter with a very high resistance meter (more sensitive) let's say 100 megohms it will not make much change when in circuit or out of circuit since 100 million ohm resistance across 100 ohms is 99.99999 ohms equivalent circuit. (1 millionth less) Let's replace the 100 ohm bulb with a variable resistance of 100 ohms. We place the volt meter across the variable resistance and measure the voltage. Let's say 2 volts. Now we will decrease the load resistance, until we read exactly 1 volt on our meter. What ever resistance the load is now presenting is exactly the same as the internal source resistance. We have determined the equivalent resistance of the source since half the voltage is now present across our external load, meaning the other half must be internal to the source.

If we measure the resistance of the load as 10 ohms, we know the internal resistance must also be 10 ohms, because our 2 volt circuit is developing a drop of 1 volt across the load, exactly half. We did not measure the actual internal resistance of the load; we measured the value by using an equivalent circuit to obtain a voltage divider with two series resistances, load and source. Since our source resistance with the lamp in circuit was 100 ohms for the lamp, and we know the internal resistance of the source was 10 ohms, we have a total series resistance of 110 ohms. We can now calculate the current in the circuit, from our

two known values: 2 volts and 110 ohms. We can also calculate the power either by using the voltage, or the derived current value and the known circuit resistance. We did not measure current, and we did not measure power, they were determined by derivation of the voltages.

The VOM etc meters operate in the same manner. The scales are derived from the voltage drop across a known resistance in the meter. Now you may be saying, but wait, I open the circuit to insert a current meter to read the amperage in the circuit. Actually the inserted series meter is a very low resistance shunt across which is a very high resistance meter circuit. It is nothing more than our first example of two resistors in parallel. Likewise for resistance readings, we are substituting a known voltage (set by the calibration knob) for the regular source voltage. Since the meter voltage is a known, and the internal resistance is known, the external resistance is measured by the voltage drop developed across the combination, on a calibrated scale.

Those of us, who remember the Wheatstone bridge, recognize the calibration pot as one side of the balanced bridge, and the known resistance is replaced by the DUT (unknown resistance) and we rebalance the bridge and read the subsequent value.

We measure power with a calorimeter, or with a volt meter that uses basic assumptions of the relationship between voltage, impedance to derive a reasonable accurate reading. But that was expressed in my last article on measuring power. ATVQ

Message From The President (ATN-CA)

As my first official act as the new President of the California Chapter of the Amateur Television Network I would like to thank Allan, W6IST for the great job he has done as President over the last year.

I would also like to thank all of you who attended our annual Winter meeting in February. At the meeting, in addition to being updated on the repeater status and Secretary/Treasurers report, we approved the ATN-CA Constitution, elected a new president and vice-president, and gave out several recognition awards.

I would also like to thank Dave, KA6DPS, (more affectionately know as Rockin' Chair Dave) for the great job he has done over the years as Net Control for the Tuesday night net. Starting next Tuesday, Barry, N6HOG, will be taking over the reins on Tuesday night. Please join me in welcoming Barry as Net Control.

I would also like to recognize Daryl Owen, N6DOT, for all he has done for the ATN and our repeaters over the last year and especially for accepting the nomination for (and being elected to) the position of vice-president for ATN-CA. I look forward to working with him this coming year.

Several members renewed their membership at the meeting. For those of you that were not able to renew at the meeting or were not able to attend the meeting, you can still send your membership dues to Mike Collis. The dues are still $50.00. To renew, please make your checks payable to Mike Collis, WA6SVT, our Secretary/ Treasurer. We need to get everyone to renew their membership so that ATN will have sufficient funds to improve our repeater sites. Mike's address is P.O. Box 1594, Crestline, CA 92325. If you are a new member or have changes to your address, call sign, email address, or phone number, please go to the ATN website (**http://atn-tv.org/**) and click on the "Membership Application" link and include that form with your payment.

As always, we all need to work on increasing the Amateur Television Network membership here in Southern California. One way to increase membership would be to have more members give presentations on amateur television and the ATN to clubs in their area. Any suggestions you have for demonstrating amateur television or recruiting new members would be appreciated.

Another way to promote the ATN (and help to increase our membership) is by getting more activity on the repeaters. Remember, ***hams should be seen, and not just heard!***

The ATN's Elmer program is a great way to take someone from a casual interest in amateur television to becoming a participating member of the ATN. Check out the ATN Elmers page on the ATN website for a list of current elmers. If you would like to be an Elmer to help other hams in your area to get started on ATV, please give me your contact information so that I can post it to our website. We now have two Elmers in San Diego and one in the San Fernando Valley. We need some in Orange County and the Ventura County/Santa Barbara County areas. Please volunteer if you are able to do so.

In addition to being the President of the ATN-CA I will continue as the webmaster for the ATN website, so if you have any ideas or suggestions for our website, be sure and let me know. I am looking forward to moving the website to a new server that Daryl, N6DOT, owns/manages. This move will not change the address of the website, but should make it easier to update, maintain, and backup (Thanks Daryl for the hosting and server space).

In closing, I would like to acknowledge that without the technical (and financial) contributions of Mike Collis, WA6SVT, that the Amateur Television Network as we know it today would probably not exist. All of us that enjoy amateur television, especially here in Southern California, owe him a big debt of gratitude.

If any of you want to contact me, my e-mail address is **ke6bxt@qsl.net**. I would like to hear from you if you have suggestions for our group. You can also contact Daryl, N6DOT, at **n6qpk@n6qpk.com**.

Don Hill, KE6BXT - ATN-CA President ATVQ

Turn Your iPod Into A Color Bar and Tone Generator

By: Steve Anderson - Email: sjanderson@ucsd.edu
UCSD-TV
9500 Gilman Dr.
La Jolla, CA 92093-0176

Any iPod that has video out can be used as a color bar generator. You'll need the NTSC bars image file and the tone file (right click on the links listed at the end of the article to download them).

Create a new album in iPhoto called NTSC Bars.Drag the clrbars7.jpg file into it.

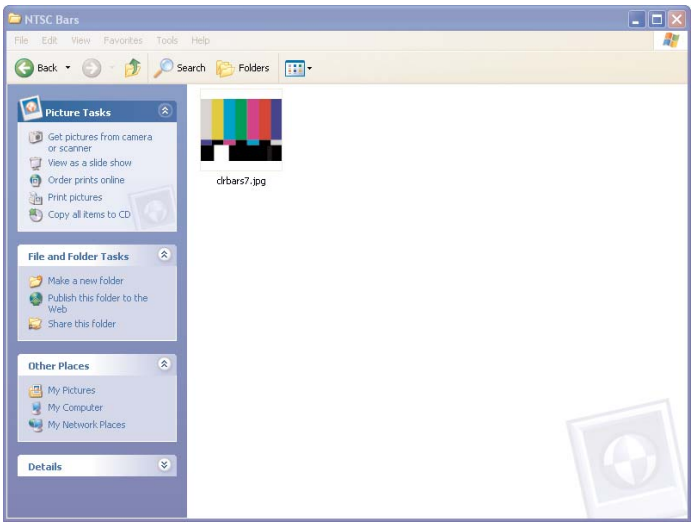

In iTunes create an album called Tone and drag the 1000hz.m4a file into it.

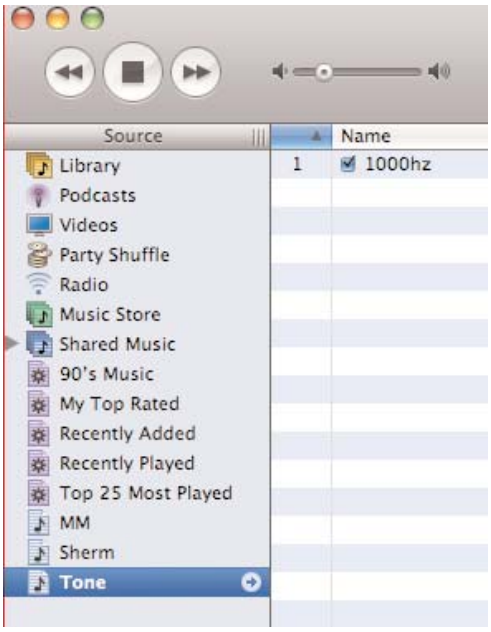

Plug your iPod into your computer and drag the Tone album from your iTunes library into your iPod.

In iTunes right click on the iPod icon and choose iPod options.

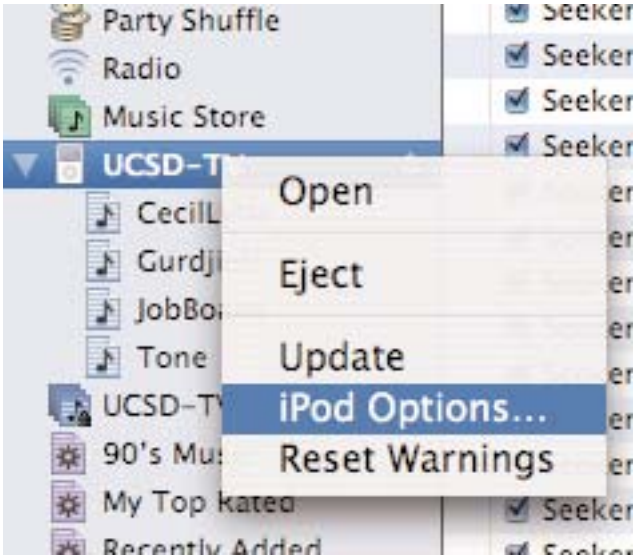

Under the Photos tab, choose 'Synchronize photos from iPhoto', "Copy selected albums only', and choose NTSC Bars. Click ok and your iPod will load the color bars image.

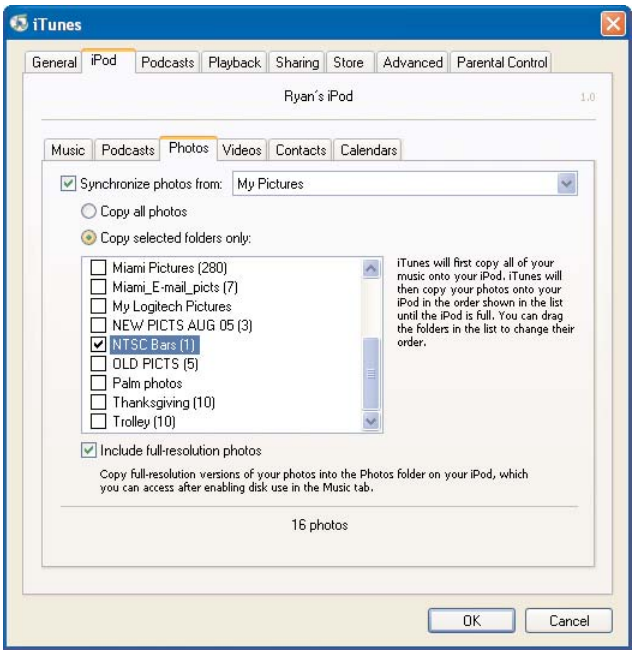

Unplug your iPod and scroll to the main menu. Click on Photos, then Slide Show settings. Choose 20 seconds under Time Per Slide, under Music choose the Tone album, and repeat should be on. Now go back one to the Photos menu, click on NTSC Bars and click play. You'll need an AV cable, then you are all set.

Get the files at:

http://colorbars.pbwiki.com/Windows

Instructions for Mac users can be found at:

http://colorbars.pbwiki.com/FrontPage

ATVQ

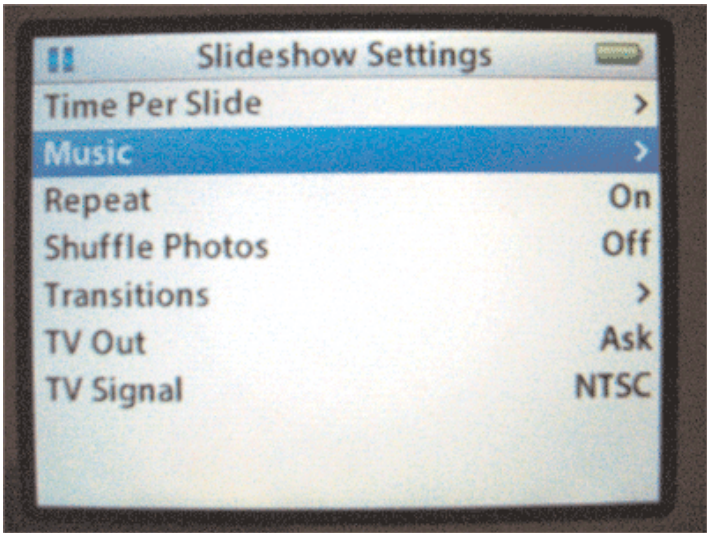

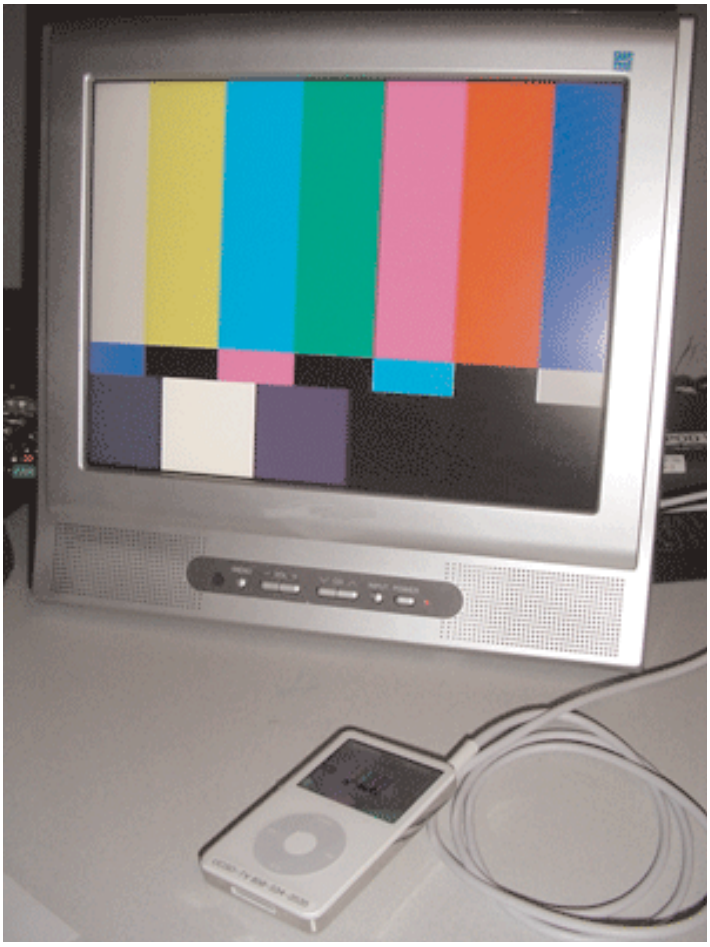

Fort Wayne, IN ATV Repeater from Pleasant Lake, MI

I was getting into the Ft. Wayne ATV repeater (97.5 air miles) this morning at around 5 am with 10 watts, with color, and seeing it on 900 MHz near p3 levels. I have attached a couple screen shots. For 900 MHz we are using 2 - 45 element 18 foot loop yagis at 110 feet.

Got an ATV repeater on the air up this way finally. We are just testing at this point though. It is 439.25 MHz horizontal in and 910.250 MHz out vertical. Using homemade 4 bay of little wheels for 439.25, and a Scala commercial antenna for 900 MHz. Antennas are at about 175 feet. We run one of those linear Glenayre amps, currently 400 watts output. Dad wired up an Intuitive ATVC-4 controller, we use a P.C. Electronics ATVR-4 repeater receiver, a 1.5 watt P.C. Electronics 900 exciter, and a Sandisk digital photo viewer (for ID). We have a homemade 7 pole LVSB filter on the 439.25 receive side. We converted to lower vsb just to minimize some local interference. Since there is a uhf repeater at the same site, at 444.575mhz, running 225 watts with only 25 feet antenna separation. The system seems to be working quite well for right now.

ATVQ

Bryan- KC8LMI **kc8lmi@triton.net**

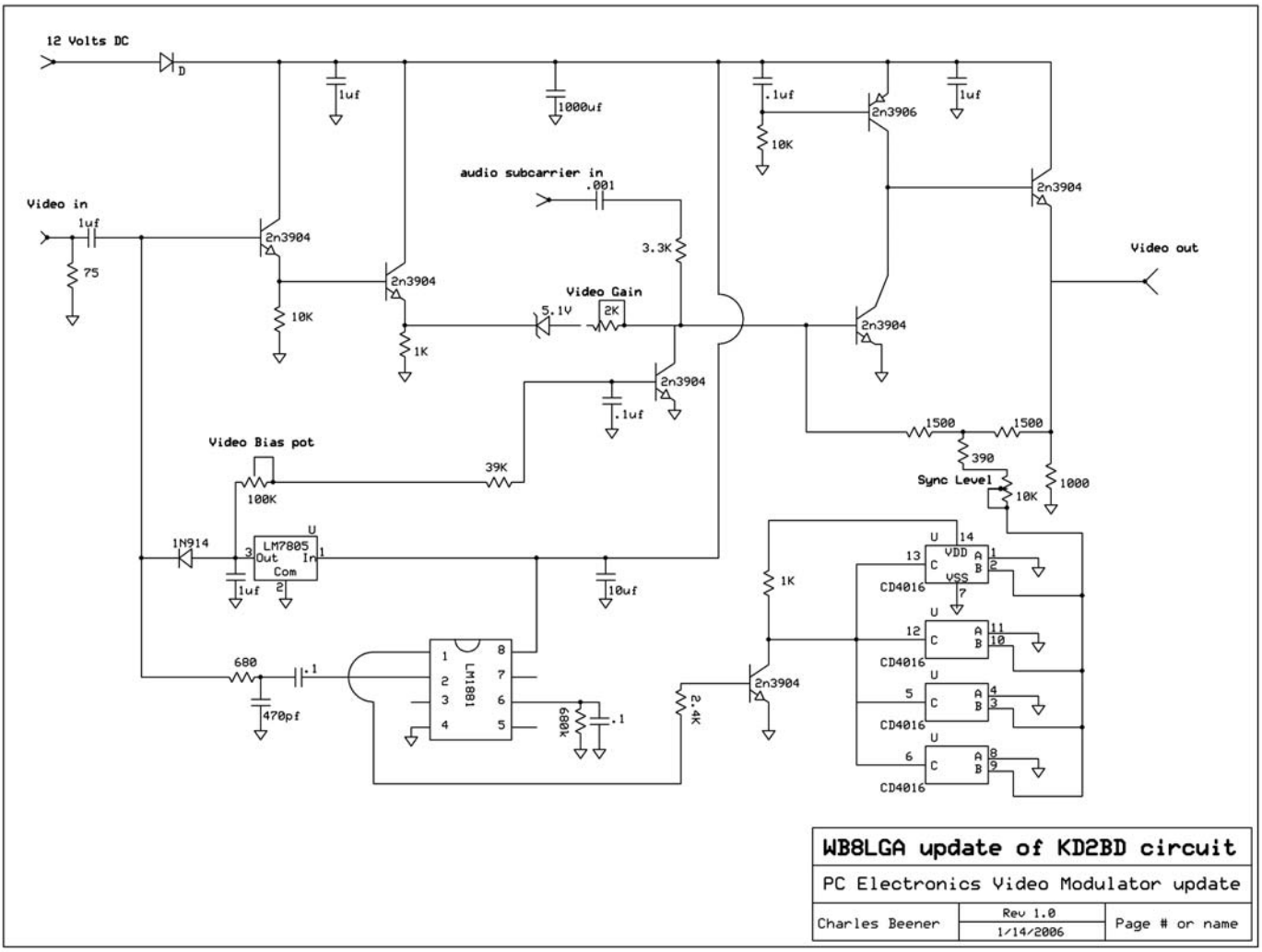

Update Of The KD2DB Video Modulator

The reference to his article is.

http://www.qsl.net/kd2bd/modulator.html

His is a very good article. The modular work's good! I did one change that really improves the operation of this modular. I removed the LM311 and replaced it with an LM1881Video Sync detector chip. The LM311 was very touchy on the detection of the sync. With the LM1881 you can have a good amount of video & DC voltage level. The sync stretcher circuit will remain the same.

I first made his video modulator on a PC board and found out the problem with the LM311. Instead of making another PC board I just adapted my original board. I removed the LM311 IC from its socket, took some small wires (ends off of resistors) and put them into the top of a 8 pin IC socket. Then I soldered those wires from the socket to a small peace of perf board (about 1 1/2" square).

All the parts on the circuit drawing inside the dashed lines are put on the perf board. The wires coming from the original LM311 socket will have all the wiring points that you need to interconnect from the original modulator and the perf board, except the video going to the original board. Once this is done, plug the socket that has the wires coming out of it into the LM311 socket on the video modulator.

This is the only update of the circuit that needed to changed. Do this method if your going to update a modulator with an LM311 sync stretcher. All the rest of the original circuit is left the same.

Charles Beener - WB8LGA
cbeener@columbus.rr.com

ATVQ will see YOU at the Dayton Hamvention! Booth 207 - Full of ATV Supplies

Tower Rat

11 year old Mikayla Auerswald, KC9HVQ, climbs her dad's 57 foot tower (John Auerswald, KA9SOG) to attach a rope and pulley that is to be used to install new antennas and hardline for 1.2 Ghz and 2.4 Ghz ATV operations. Mikayla is currently the president of the Rockford Chapter of the Amateur Television Network.

ATVQ

KC5ACR Says Thanks!

To the Amateur Radio Community,

As Expedition 12 draws to a close onboard the International Space Station, a note of gratitude is due.

I would like to express my deep gratitude to the world-wide amateur radio community for your participation in this great adventure. Clearly, one of the benefits for Amateur Radio is bridging the distances between us. Through your participation, you helped realize the potential for the human exploration of space to do exactly that. Thanks to you, over the past six months, the International Space Station has been more international than ever before. Together, we achieved many significant milestones from space, DXCC, WAC, WAS, and most importantly, 35 school contacts (as of March 21).

Special thanks go to Kenneth Ransom, N5VHO, without whose tireless efforts to coordinate our activities onboard none of this could have been achieved. Kenneth provided invaluable technical advice, as well as raising the bar as each goal was achieved. I would also like to thank the ISS Fan Club for your enthusiastic support of ARISS. And personal thanks to Cor - PD0RKC in The Netherlands, Alain - IZ6BYY in Italy, Keith - ZS6TW in S. Africa, and Patrick - WD9EWK in Arizona for enlisting the participation of the stations we needed to meet the goals for Expedition 12.

It is with no small degree of sadness to realize that soon I will no longer be able to float to the aft part of the station, dial up our frequency pair and call "CQ", knowing that a host of friends are waiting to talk. Good luck to you all. Thank you, again, for your participation in this greatest of all human endeavors. I look forward to listening as you continue your enthusiastic support of the International Space Station and, one day, human colonies on the Moon and Mars.

73 de NA1SS

Bill McArthur, KC5ACR - Commander, Expedition 12
International Space Station

ATVQ Says Thanks To Bill!

I have to pass along my thanks as I was fortunate to work Bill during the last 20 seconds of a pass. I did not think I was going to get him, but I said, OK, one last call! - Gene - WB9MMM

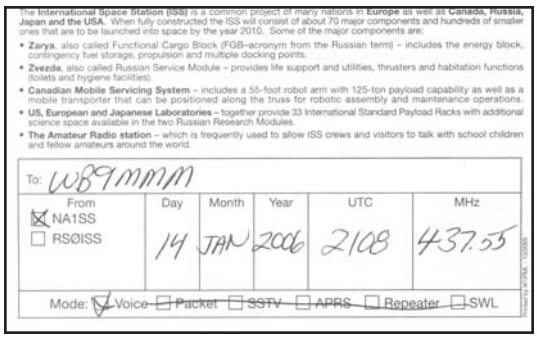

The **International Space Station (ISS)** is a common project of many nations in **Europe** as well as **Canada, Russia, Japan and the USA**. When fully constructed the ISS will consist of about 70 major components and hundreds of smaller ones that are to be launched into space by the year 2010. Some of the major components are:

- **Zarya**, also called Functional Cargo Block (FGB-acronym from the Russian term) – includes the energy block, contingency fuel storage, propulsion and multiple docking points.
- **Zvezda**, also called Russian Service Module – provides life support and utilities, thrusters and habitation functions (toilets and hygiene facilities).
- **Canadian Mobile Servicing System** – includes a 55-foot robot arm with 125-ton payload capability as well as a mobile transporter that can be positioned along the truss for robotic assembly and maintenance operations.
- **US, European and Japanese Laboratories** – together provide 33 International Standard Payload Racks with additional science space available in the two Russian Research Modules.
- **The Amateur Radio station** – which is frequently used to allow ISS crews and visitors to talk with school children and fellow amateurs around the world.

To: WB9MMM

From	Day	Month	Year	UTC	MHz
☒ NA1SS ☐ RSØISS	14	JAN	2006	2108	437.55

Mode: ☑ Voice ☐ Packet ☐ SSTV ☐ APRS ☐ Repeater ☐ SWL

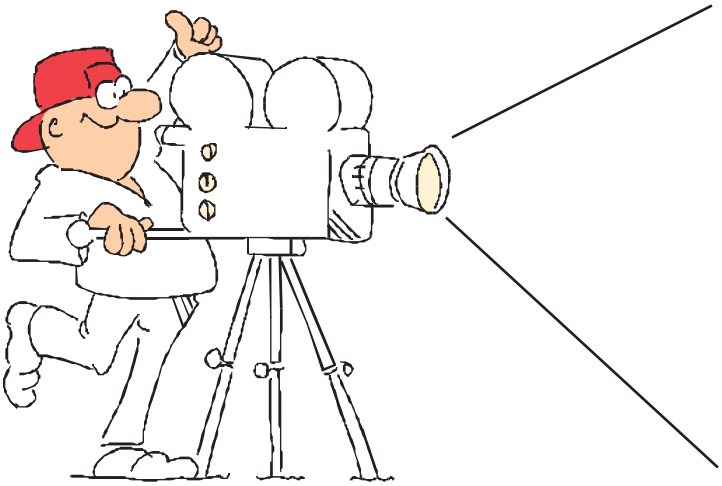

ADVERTISE IN ATVQ!

ATV'ers are hams that build projects more than other hams. They have a varied background ranging from technicial to engineer, and just might see a need for your product in their regular job as well as in their hobby. I hope to hear from you soon.

Please call TODAY!

Gene Harlan - WB9MMM - Editor/Publisher

ADVERTISING RATES AND DEADLINES

DEADLINES

COVER DATE	COPY DEADLINE	TO Printer	MAILING DATE
WINTER	January 1	January 15	Febuary 1
SPRING	April 1	April 15	May 1
SUMMER	July 1	July 15	August 1
FALL	October 1	October 15	November 1

While we will try to adhere as close as possible to the above dates, we reserve the right to adjust as needed.

If material is going to be late, please call to check if it will meet our schedule. We will try to accommodate everyone as best as we can.

Camera ready art or negative film right reading down are acceptable.

Trim Size: 8 1/2 x 10 7/8
Bleed Size: 1/8" beyond trim
Live matter: 1/4" within border

Harlan Technologies reserves the right to reject any advertising which is not in keeping with the publishers standards. Previous acceptance of any ad will not prevent Harlan Technologies from exercising the right to refuse the same advertisement in the future. Advertising orders are subject to the terms on the current rate card. Advertisers assume all responsibility and liability for any claims arising from advertisements and will protect the publisher from same.

Harlan Technologies will position ads in ATVQ at its discretion except in the case of preferred positions specifically covered by contract or agreement.

If, for any reason, the publisher fails to publish an advertisement, it will not be liable for any costs or damages, including direct or inconsequential damages.

Terms: All accounts not pre-paid are billed net 30 days. All accounts over 30 days are billed at 1 1/2% per month. Prompt payment is always appreciated.

RESERVE YOUR SPACE TODAY!
1-815-398-2683

AD RATES

Effective 1-1-2004

	INSERTIONS PER YEAR	
SIZE	1-3	4 up
FULL PG COLOR	$650	$500
FULL PG B&W (Covers II, III, IV $30 extra) (2nd color add $75 per page)	$160	$140
ADDITIONAL COLORS/PAGE	$100	$100
1/2 H or V	$110	$80
1/4	$85	$55
1/6	$55	$38

Multi-page ads are billed at the combined rate based on frequency.

Covers are reserved for COLOR ads.

All typesetting and layout charges for non camera ready ads will be added.

Amateur Television Quarterly

published by Harlan Technologies
5931 Alma Dr., Rockford, IL 61108
tel (815) 398-2683 fax (815) 398-2688
Internet: http://www.hampubs.com email: ATVQ@hampubs.com

Harlan Technologies

ATV Secrets VOL. 1. A 100 page beginners book, non technical, answers all those FAQ's. **$8.95**.....

ATV Secrets VOL. II. A 300 page technical compendium with everything you need to know about every aspect of ATV and UHF operation. Over 90 technical projects, plus theory and more. **$24.95**. . . . . **On CD ONLY**

BOTH V1 & V2 on CD- $25.00 (Includes ATV Repeater Shipping **$6.00** (USA - Overseas more).....

IMPORTED BOOK:
The ATV Compendium from BATC. A great technical book applicable to UK and US systems **~~$16.95~~ - Special $10**.....

NEW! "The Best Of Beasley - K6BJH - On Amateur Television" A collection of all the cartoons that have appeared in ATVQ over the years plus many more! Reg. ~~$8.95~~
SPECIAL Only **$5.00** (shipping $3 US - $6 Overseas) .....

Many issues of ATVQ are now available on CD ROM.
CD 1 contains 1988 & 89 (6 issues), CD 1 is $15.00 .....
CD 2 contains 1990 & 91 (8 issues), CD 2 is $15.00 .....
CD 3 contains 1992 & 93 (8 issues), CD 3 is $15.00 .....
CD 4 contains 1994 & 95 (8 issues), CD 4 is $15.00 .....
CD 5 contains 1996 & 97 (8 issues), CD 5 is $15.00 .....
CD 6 contains 1998 & 99 (8 issues), CD 6 is $15.00 .....
CD 7 contains 2000 & 01 (8 issues), CD 7 is $15.00 .....
CD 8 contains 2002 & 03 (8 issues), CD 8 is $15.00 .....NEW... .....
plus $5.00 shipping ($6 for two, $7 for three, $8 for four or more - Other than USA - higher). .....
Complete set of all 8 ATVQ CD's - $90.00 plus $8.00 shipping (USA) .....

Previous ATVQ issues that are still available (most from 1994 to present) sell for **$4.95 each** (postage included for USA). Quantities are limited. Many good articles exist in these issues! .....
Color Test Chart including Color Bars, Resolution, Grey Scale, Registration **$5.00** (shipping $3) .....

SUBSCRIPTIONS :

VHF COMMUNICATIONS, a super quarterly publication from KM Publication in England - **$37.00** .....

Amateur Television Quarterly .....

RATE	USA	CANADA	DX
1 yr.	$20	$22	$29
2 yr.	$38	$42	$57
3 yr.	$55	$61	$84
4 yr.	$71	$80	$111
5 yr.	$87	$99	$136
LIFE	$399	$439	$579

PLEASE NOTE the EXPIRATION DATE on your mailing label. Please re-new early!

NAME:_____
STREET:_____
CITY:_____
STATE:_____ POSTAL CODE_____Country_____
PHONE:_____ HAM CALL_____
VISA/MC/AMEX # _____
EXPIRES:_____ SIGNATURE_____
E-MAIL ADDRESS _____
ARE YOU CURRENTLY ON ATV ? _____ YES _____ NO
ARE YOU CURRENTLY ON SSTV ? _____YES _____ NO
DO YOU USE AN ATV REPEATER ? _____ YES _____ NO
IF SO, CALL OF THE REPEATER _____ LOCATION _____
DOES THE REPEATER HAVE A WEB PAGE ? http:// _____

ATVQ, 5931 Alma Dr., Rockford, IL 61108

SUBSCRIPTIONS TO ATVQ 1-815-398-2683

FAX 815-398-2688 E-MAIL ATVQ@hampubs.com

Amateur Television Contest 2006

Contest period 00:00z 06/01/06 to 00:00z 09/01/06

Contest goal: To raise activity and promote *long haul* contacts on ATV. **This year encourage everyone you see to enter!**

Participants must hold at least a Technician class license and be within the boundaries of North America, Alaska or Hawaii.

In case of multiple Ham occupants, they may share equipment during the contest so long as the intent is not merely to manufacture points. All occupants who enter must submit their own log.

Schedules: The use of schedules is allowed, and can be made by any means available. The use of 144.340 mhz national ATV calling frequency is also allowed and encouraged.

REPEATER CONTACTS DO NOT COUNT. Distance calculations will be between both stations in the QSO with no relay allowed.

Exchange: Callsign with at least P-1 video on any amateur band 70cm and above.

MOBILE or **PORTABLE** stations must exchange their location at the time of contact as determined by portable GPS or other verifiable means.

VIEWER: Station does not have to exchange any video but must be a licensed amateur and confirm at least a P-1 reception report to the transmitting station via 2 meters or another amateur band.

CLASSES: There will be 4 classes for participants:

HOME: Primary location of residence with Fixed Antenna structure. Minimum distance for repeat contacts (75 Miles)

PORTABLE: Station can be set up just for the contest and may not operate from any other location during the contest period. Minimum distance for repeat contacts (50 Miles)

MOBILE: Station can operate stopped or while moving but all antennas must be affixed to the mobile unit and capable of transmitting while in motion. Minimum distance for repeat contacts (25 Miles)

VIEWER: Station must be able to receive video at P-1 signal level and relay report to the transmitting station. Minimum distance for repeat contacts with this class is determined by the transmitting stations type or class.

Scoring System: Each valid contact will be awarded points for the mileage between the two stations on an ever-increasing difficulty per frequency basis as follows:

70cm = 2 points per mile

33cm = 4 points per mile

23cm = 6 points per mile

13cm and above gets 10 points per mile!

A station can be worked for points only once unless they are a minimum distance apart as specified by the class of entry. (See CLASSES) and then they may be worked once in a calendar month through the contest period.

The distance between stations will be calculated by the Maidenhead Grid and sub grid identifier coordinates listed on QRZ.com and rounded down to the nearest mile. Every effort should be made by entrants to verify or update their information before the contest starts. If you do not have Internet to look up a stations coordinates please ask the other station, if they do not know then leave the mileage column blank and it will be determined by the verifier. No changes can be made to coordinates once the contest starts unless you move.

Distance will be calculated with the (Bearing and Distance) DOS program by W9IP that is used by the ARRL for distance records.

LOG's: All logs must be in a standard format as specified below:

STATION WORKED RPT REC RPT SENT UTC DATE FREQUENCY GRID SQ DISTANCE POINTS

Your log information should also include your Name, Address, your Maidenhead Grid and sub grid identifier coordinates, and a list of equipment used. Sample Log is below and a full page Log sheets will be available on www.hampubs.com .

Logs can be submitted by email or regular mail and must be received by September 15th to be eligible for contest Awards. Send the logs to:

ATVQ Contest - 5931 Alma Dr. - Rockford, IL 61108 - or to: **ATVQ@hampubs.com**

AWARDS:

All Scores will be published in ATVQ and certificates will be awarded for the top three scores in each class. The highest overall score of the contest (The one who covers the most points on ATV) will receive the OVERALL WINNER PLAQUE

ATVQ

CALL			GRID SQ.			CLASS		
STATION WORKED	REPORT SENT	REPORT RECEIVED	UTC	DATE	FREQUENCY	Grid Sq.	MILES	POINTS
TOTAL MILES					TOTAL POINTS			
NUMBER OF DIFFERENT STATES WORKED								

Dayton Hamvention 2006

By Gene Harlan - WB9MMM Email: atvq@hampubs.com
5931 Alma Dr.
Rockford, IL 61108

Join us Friday night for an evening of food, drink, and ATV!

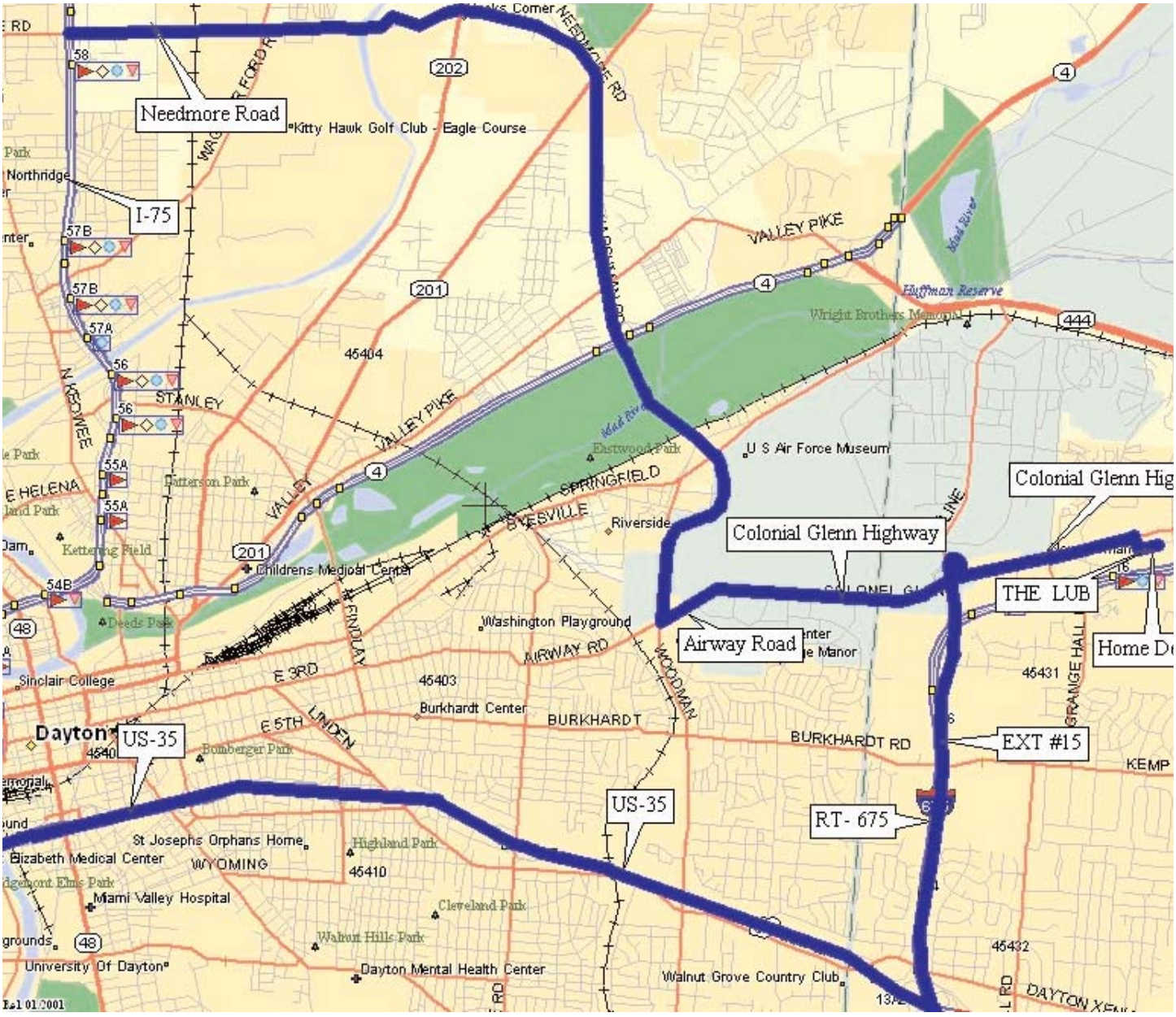

THE AMATEUR TELEVISION FRIDAY NIGHT DAYTON DINNER MEETING

Sponsored this year by the Amateur Television Network (ATN)

The Dayton Friday night dinner meeting will be held at 6pm on Friday. May 19, 2006 at QUAKER STEAK & LUBE 3725 Presidential Drive, Beaver Creek (Fairborn), OH 45324, (937)427-0500

For the high tech. vehicles you will find Quaker Steak & Lub Located (39-46-32)(84-04-08.69)

Please look at their web page, **www.quakersteak.com**
Prices range between $6.59 to $14.99 plus tax and tip.

As in past years we will be giving out amateur related door-prizes, if you have the lucky number. When close in call us on simplex 144.340 MHz.

DIRECTIONS TO THE MEETING

From North of Dayton
I-75 South and East on Needmore Road, follow the signs to the Air Force Museum, this road will change to Harshman Road then change again to N. Woodman, at the large intersection with Airway Road turn LEFT onto Airway Road, this road will change into Colonial Glenn Highway, follow past Skyline Road and past Grange Hall Road, where we were last year, now start looking for a Home Depot on your right and Presidential Drive where you will turn RIGHT onto Presidential Drive the Quaker Steak & Lube is next to the Home Depot.
(Note: Presidential Drive is about 3 miles from the intersection of N. Woodman and Airway Roads, and about 1.0 miles from the I-675 exit)

From South of Dayton
I-75 North, then East on US-35, go about 6.0 miles and then North on I-675, follow for 1.7 miles and off at Exit 15 for Colonel Glenn Highway, at the end of the ramp turn LEFT onto the Colonel Glenn Highway and go about 1.0 miles, now start looking for a Home Depot on your RIGHT and Presidential Drive where you will turn RIGHT onto Presidential Drive, the Quaker Steak & Lube is next to the Home Depot Store.

Ron Cohen, K3ZKO
Please note new email address;
k3zko@verizon.net

Forums At Dayton

As I write this, the forum for ATV time has not been set. It is "possible" that the forum may be on Friday instead of Saturday, so I would suggest that as soon as you get to the Hamvention, feel free to come by our booth (207) and we will have details so you won't miss out!

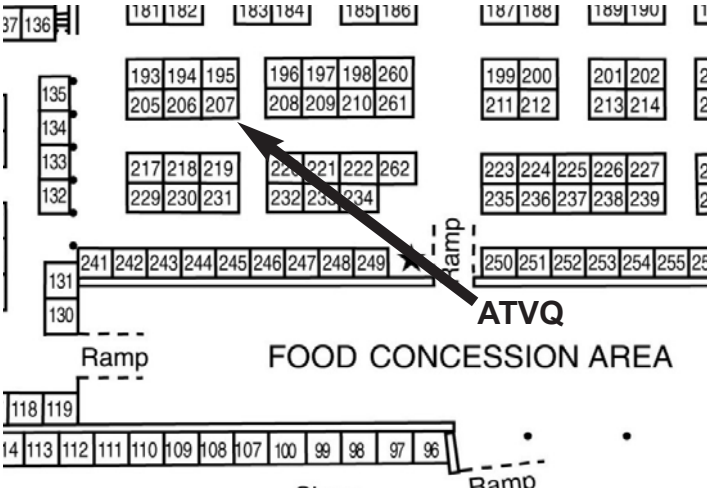

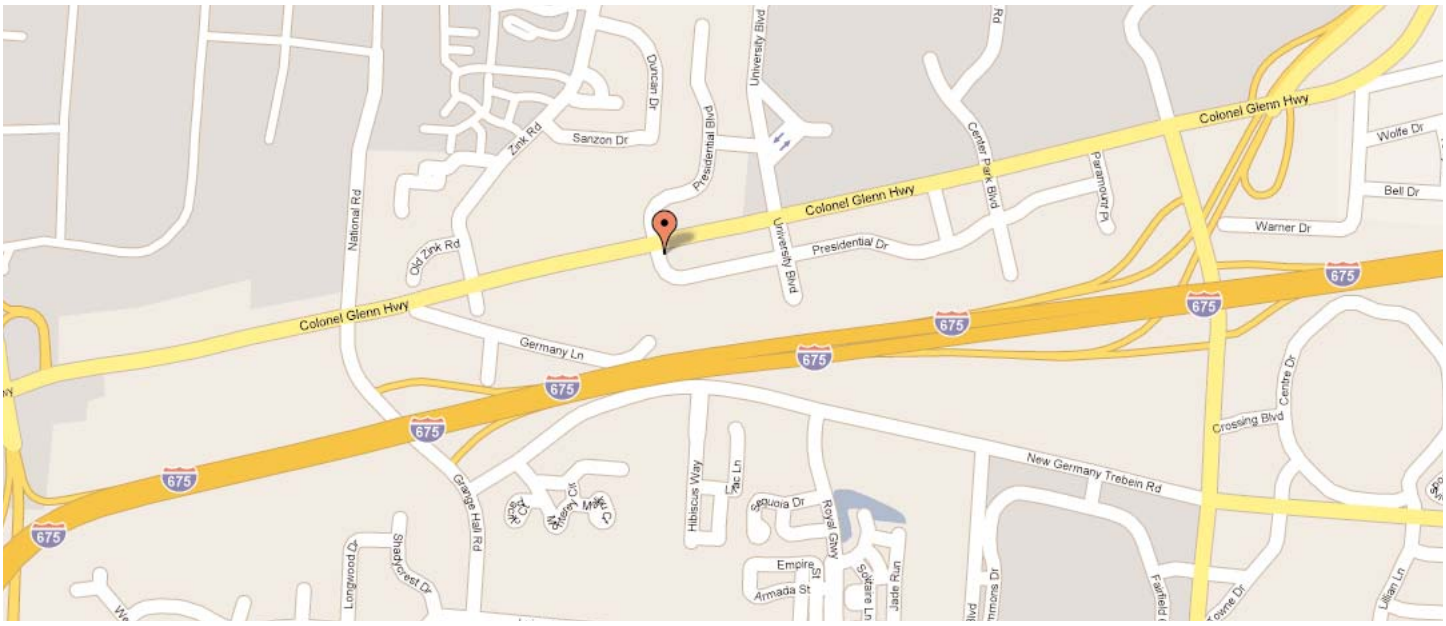

The 2006 Ham Radio Town Meeting
Saturday, May 20, 2006
1PM to 3 PM EDT
HARA Arena - Dayton Ohio
Meeting Room 3

"INTRODUCING THE HAM RADIO VIDEO CORPS"

The "Ham Radio Video Corps" came into being after the producers of two recent ARRL videos ("Amateur Radio Today" in 2003 and "The ARRL Goes to Washington" in 2005) realized that no unused or stock footage of ham radio operators in action during disaster situations existed. The three producers (Dave Bell, W6AQ; Allan Kaul, W6RCL and Bill Pasternak, WA6ITF) held numerous and lengthy discussions amongst themselves and with others to develop the concept of a separate corps of radio amateurs who will pick up a video camera rather than an HT in times of an emergency callout.

As a member of the HRVC, his or her only job will be to get pictures that are of high enough quality for broadcast on local or national television news programs and to be used in future ham radio related video presentations. How to get it to those with the best chance of getting it to air will be discussed in the session

BRING YOUR CAMCORDER TO HAMVENTION© AND HELP KICK OFF THE NEW "HAM RADIO VIDEO CORPS!"

As an added attraction, those of you with Mini-DV format video cameras are encouraged to bring them with you to Hamvention© and videotape whatever you find of interest. Then bring your cameras and tapes to this conference where Video Editor Gary Pearce, KN4AQ, will use the best shots to prepare a Video News Release (VNR) about this years show using the pictures and sound you provide.

THE PEOPLE SPEAKING THIS YEAR ARE:

Producer/Moderator: Bill Pasternak, WA6ITF - Amateur Radio Newsline Inc., Los Angeles CA.

Introducing the Ham Radio Video Corps: Dave Bell, W6AQ - President: DBA Entertainment Corp. - Los Angeles CA.. The HRVC was Dave's idea and he will be on hand to explain the concept and how he envisions it to work.

The gear you need: Bill Pasternak, WA6ITF of Amateur Radio Newsline also masquerades as a Broadcast Engineer with KTTV Fox 11 News where he is involved in the day to day operation of the technical side of the #1 rated 10 PM newscast in Los Angeles. Bill will explain what affordable gear is available to go out and capture the events of ham radio.

How to properly shoot video: Jack Parker, W8ISH - Staff news cameraman - WISH Television, Indianapolis IN. will demonstrate the proper techniques of using a video camera. He will also explain what mistakes to avoid making.

Preparing the story: Alan Kaul, W6RCL - Producer - NBC Network News, Burbank CA. Was named 2005 Hamvention Radio Amateur of the Year for his work in publicizing ham radio through the use of video. He is an expert in telling a story using pictures and sound. In his presentation, Alan will share a few of the secrets of the trade and show how an idea becomes a completed video presentation. (May be pre-recorded)

The art of video editing: Gary Pearce, KN4AQ - Freelance producer/editor - Raleigh, NC. will give a live demonstration as to how video is now edited using computers. He will also tell you what video editing software is out there that you can afford and easily learn to use.

Choosing video from and editors point of view: Keith Glispie, WA6TFD, co-owner Suite 16 Post, Burbank CA. Is one of the most sought-after video editors in Hollywood. His work is seen weekly on Fox, Lifetime, the Disney Channel and elsewhere. In his presentation, Keith will explain how producers and video editors work together to choose the right "pictures" and "sound" to make a scene sparkle.

The legal aspect of videography: Permissions, releases and other legal issues: Speaker to be announced.

The involvement of ARRL: Allen Pitts, W1AGP - Media and Public Relations Manager - ARRL -Newington CT. will discuss the Leagues role in this and other projects including the new "Hello" campaign.

Some interesting ham radio video stories from down-under: Jim Meachen, ZL2BHF - TV New Zealand - Auckland N.Z. will present some very interesting clips showing how video is used by hams "down-under."

The Ham Radio Town Meeting is an annual joint presentation of the Dayton Hamvention© in association with the Amateur Radio NewslineT Inc.

A drawing for a door prize will take place at the end of the session. Prize donated by Heil Sound Ltd.. You must be present to win.

ATVQ

ATVQ
BOOTH 207

Conditioning A/V Signals For RF Modulation

Used with permission from
Dallas Maxim
http://www.maxim-ic.com

VIDEO CIRCUITS
APPLICATION NOTE 3551

Even as display devices move toward digital video, they retain the legacy of an RF-modulated analog TV output. That output is specified in the US by the National Television Standards Committee (NTSC), and utilized in security applications and in the Digital Video Broadcasting (DVB) Project as specified by the European TV standard phase alternation line (PAL). All modulators, whether simple analog types or single-chip synthesizers, require properly conditioned audio and video input signals.

Despite the need for an integrated circuit, the ubiquitous interface between the modulator and audio/video (A/V) signals has not yet been reduced to an IC. The main reasons for that deficiency are the difficulty of such a design, the variations required for different standards, and the variable levels required by the modulator itself. The alternative to an IC interface is a discrete design.

The signal-conditioning requirements include lowpass and notch filtering of the video, group-delay compensation for the video, preemphasis for the audio, and (to adjust the modulation level) level controls for both audio and video. Because many cable and satellite receivers, VCRs, DVDs, and TVs do not fully comply with these signal-conditioning requirements, the modulated signals of channels 3 and 4 have poorer quality than that of the baseband composite (Cvbs). The following discussion explains the interface requirements and how to meet them using standard op amps and discrete components. The resulting low-cost circuitry can also provide rear-panel outputs for most A/V appliances.

Requirements and Concerns

For driving RF modulators in NTSC and PAL systems, the allowable video group-delay variation and required audio preemphasis are clearly specified by Recommendation ITU-R BT.470-6. Most of the other indistinct specifications are summarized and extrapolated to include other, unstated design specifications in **Tables 1 and 2**. Table content is based on typical back-panel outputs for a TV, DVD, or set-top box having both baseband and RF-modulated A/V outputs (**Figure 1**).

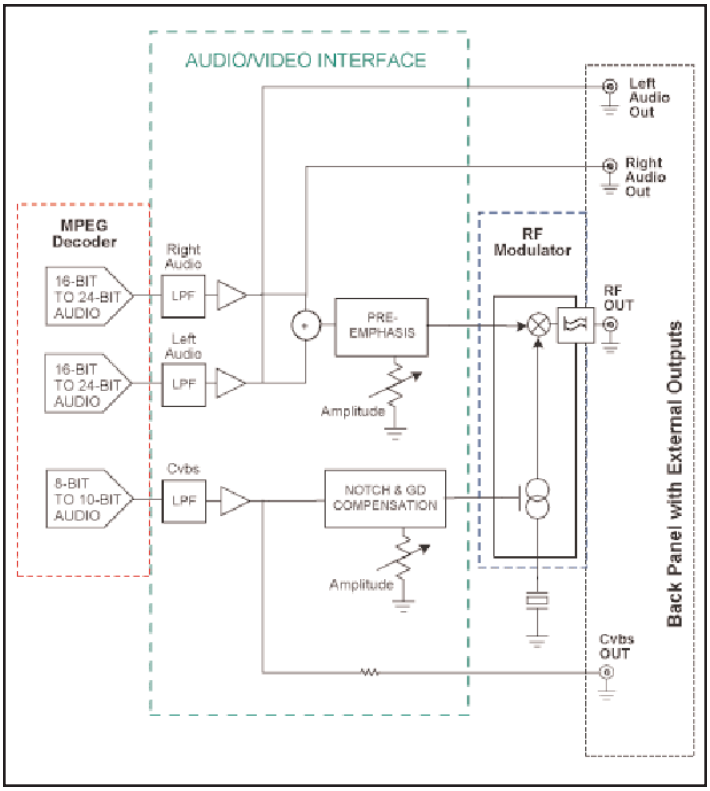

Figure 1. Block Diagram of A/V Signal Conditioning to Drive an RF Modulator.

Table 1. Audio Requirements from ITU-R BT.470-6

Audio	NTSC	PAL
Level at Rear Panel	$2V_{RMS}$	$2V_{RMS}$
LP Bandwidth	20kHz	20kHz
Preemphasis	75µs	50µs
FM Bandwidth	F_{ac} ±25kHz	F_{ac} ±50kHz

Video	NTSC	PAL
Level at Rear Panel	$1V_{P-P}$	$1V_{P-P}$
Color Subcarrier (F_{sc})	3.58MHz	4.43MHz
Color Subcarrier Bandwidth	F_{sc} +620kHz F_{sc} -1300kHz	F_{sc} +600kHz F_{sc} -1300kHz
Audio Subcarrier (F_{ac})	4.5MHz	5.5MHz
LP Bandwidth, -3dB	4.2MHz	5.0MHz
Notch Bandwidth, -3dB	600kHz	600kHz
Notch Bandwidth, -15dB	50kHz	50kHz
Notch Depth at F_{ac} ±25kHz	-15dB (min)	-15dB (min)
Group Delay at F_{sc}	170ns (typ)	170ns (typ)
Group Delay Variation	Note 1	Note 1

Table 1. Video Requirements from ITU-R BT.470-6
Note 1: See Figure 3 of ITU-R BT.470-6.

Some of these requirements depend on the source. If the signals to the modulator come from a DAC, for example, they obviously need reconstruction filtering to prevent out-of-band modulation, and to remove artifacts, noise, and aliased signals. Generally, they must also be amplified to compensate for back-terminated loads and variation in the DAC outputs.

The requirement to notch-filter the video around the audio subcarrier is not stated, but implied by the group-delay adjustment described in Figure 3 of ITU-R BT.470-6. Such notch filtering is usually recommended for modulator chips. Also requiring attenuation are the rear-panel signals, whose output levels are typically higher than required for the modulator inputs. These conditions lead to requirements for the A/V interface of Figure 1:

- A lowpass reconstruction filter for A/V outputs generated by DACs
- A sound-subcarrier bandstop or notch filter, centered on the sound subcarrier; this filtering causes a large variation in group delay near the notch frequency[1]
- Group-delay compensation to meet the profile in Figure 3 of ITU-R BT.470-6, as determined by that standard
- Summing of right and left channels to form monaural audio (necessary only when putting stereo outputs into a monaural modulator)
- Audio preemphasis, as determined by the ITU-R BT.470-6 standard (Table 1)
- Adjustable A/V amplitude to set the modulation index as determined by the ITU-R BT.470-6 standard and the modulator chip used

Start by Filtering

The first thing to be done is lowpass-reconstruction filtering to suppress aliased outputs and out-of-band noise in the modulator's audio and video inputs. Active filters for that purpose allow the increase of the DAC output to standard levels, while driving the rear panel and the RF modulator.

Audio adjustment requires a lowpass filter (LPF) with a -3dB point of 22kHz to 24kHz, and enough gain to produce $2V_{RMS}$ at the rear panel. We assume a gain of two and, because audio is highly oversampled, the requirement can be met with a single passive RC filter. As explained later, the second RC filter is for the audio modulator, not reconstruction. The **Figure 2** circuit drives the rear-panel outputs and the input to the audio portion of the RF modulator.

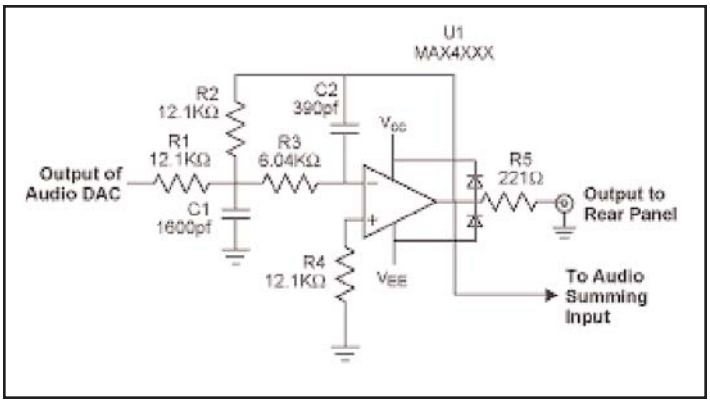

Figure 2. Pole Reconstruction and Noise Filter with Gain of 2V/V for Audio Outputs.

Video adjustment is more difficult. It is not highly oversampled and, therefore, requires at least a three-pole reconstruction filter. If this filter causes excessive group-delay variation, you must compensate for it and add gain to make up for variations in the video DAC output and back-termination loss. Again, the best solution is an active filter. A suggested design for NTSC or PAL[2] applications is shown in **Figure 3**. Benefits of this design are adjustable group delay (using R8), and the ability to drive the rear panel as well as the input to the video portion of the RF modulator. You can address multiple outputs such as composite video and S-video by combining the active filter with a triple or quad op amp (like the MAX4382 or MAX4383).

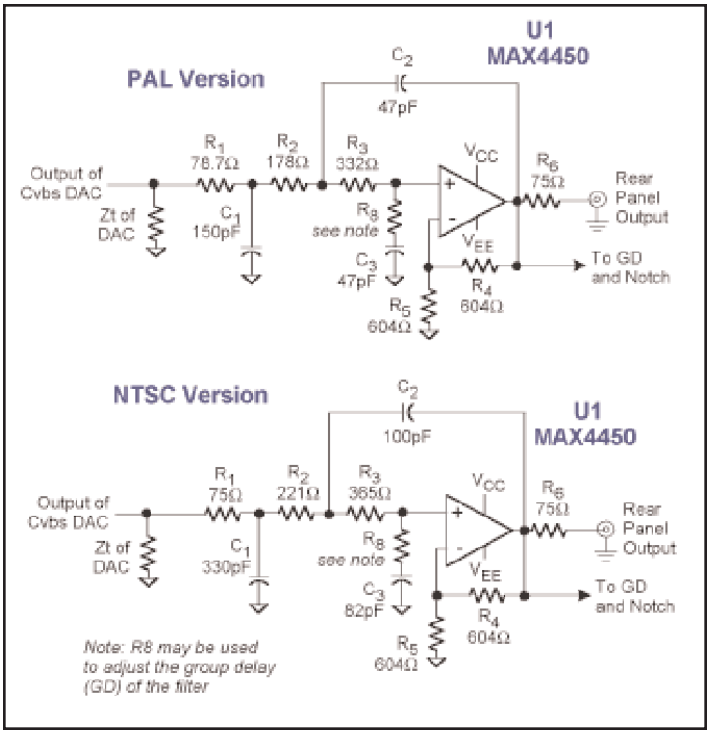

Figure 3. NTSC and PAL Reconstruction Filters.

Audio-Modulator Signal Conditioning

The first step in signal conditioning for the audio modulator is to sum the left and right stereo channels into a single channel and reduce their amplitudes[3]. Next, add a buffer with preemphasis network[4] to boost the high frequencies. A low-cost method for boosting high frequencies (**Figure 4**) employs a resistive-tee network with variable resistance to ground. Thus, the left and right audio signals are summed by R1 and R2 into the sum of R3 and R4. R3 adjusts the level, and R4 sets the maximum attenuation.

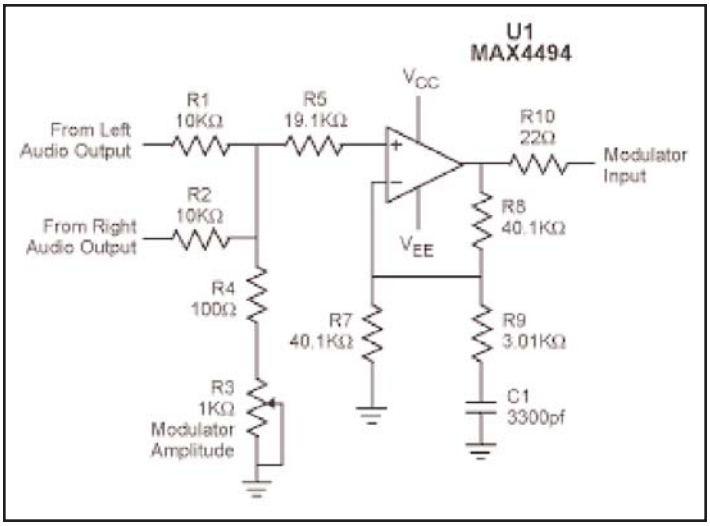

Figure 4. Summing Network with Attenuation and Preemphasis for Audio-Modulator Drive.

The preemphasis network is a lead-lag network formed around the op amp by R7, R8, R9 and C1. This network's time constant is t = [(R7*R8/R7+R8)+R9]*C1, or 75µs (~2100Hz) for NTSC. To modify the circuit for PAL systems, change the value of R7/R8/R9 and/or C1 to achieve a 50µs time constant. R5 balances the offset voltage caused by the input and bias currents, and R10 isolates the output from excessive capacitive loads.

Note that, to prevent overmodulation by the boosted frequencies, the Figure 4 preemphasis is essentially removed by the second pole in the audio-reconstruction filter. This action is called "roofed" preemphasis. As a note of caution, increasing the LPF bandwidth can cause overmodulation if the audio DAC signal includes significant out-of-band noise. The tradeoff is a separate audio-reconstruction filter for the modulator and the rear-panel outputs.

Video-Modulator Signal Conditioning

The next step is conditioning the video. We must apply a notch or bandstop filter to the composite video near the FM sound subcarrier to prevent interference when that subcarrier is combined with the video. The sound subcarrier is just above the color subcarrier, and the group-delay variation caused by notch filtering is several hundred nanoseconds. Notch filtering causes color to change by altering the color-subcarrier phase. To correct it, several first-order delay stages must be added. To reduce the number of stages in this case, we use second-order LC circuits, rather than RC circuits, for the notch filter and group-delay compensation (**Figure 5**). This example is for NTSC applications, but is also suitable for PAL systems after some adjustment in component values.

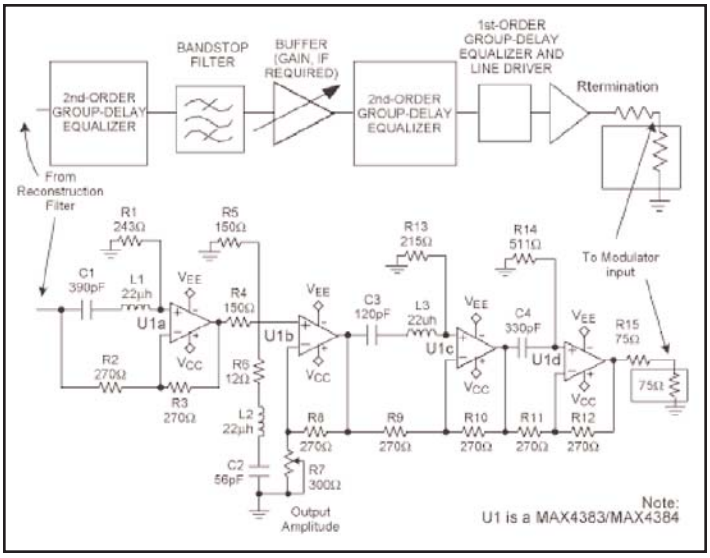

Figure 5. Block Diagram and Schematic of NTSC Bandstop Filter and Delay Equalizer.

The second-order equalizer stage uses R2 and R3 to set the gain, L1 and C1 to set the frequency, and R1 to set the Q of a second-order allpass network. L1 is a standard 22µH inductor from SMD. C1 is adjusted to set the frequency, and R1 is adjusted to set the Q and group delay. This stage sets the GD at slightly less than the peak value of GD produced by the notch filter.

The center frequency of the LC bandstop filter is set by:

$$F_{AC} = 1/\sqrt{L2\,C2}$$

Bandwidth (BW) or loaded Q is set by the equivalent resistance (R_{eq}) and inductive reactance (Xl):

$$Q = R_{eq}/Xl = (R4R5/R4+R5) + R6/2\pi L2 = F_{ac}/BW$$

We know L2 and F_{ac}, and the BW we need is 3.58MHz + 620kHz = 4.2MHz. F_{ac} is 4.5MHz, so the BW is ±300kHz, or 600kHz from Table 2. Therefore,

Q = 4.5MHz/600kHz = 7.5

Choosing L2 and solving for R_{eq}, we get 622 ohms /7.5 = 83 ohms. Using 150 ohms for R4 and R5, and R6 as a trimmer, the R4-R5 divider attenuates the input by -6 dB. The tolerance of L2 is compensated by adjusting C2 only.

U1b forms a buffer with adjustable gain set by R7 and R8, which prevents loading the prior stage. If no gain is required, you can prevent oscillation[5] by removing R7 and lowering the R8 value to 22 ohms. This modification and the attenuator in the prior stage allow the output level to be adjusted to match the modulator and set the modulation index.

The next second-order equalizer stage is similar to the first, only higher in frequency and lower in Q. The frequency is adjusted with C3, and Q with R13. The gain is set to 1V/V by R9 and R10 around U1c.

The final stage is a first-order equalizer and line driver, in which R14 and C4 set the delay, and R11 and R12 set unity gain. R15 back-terminates the output into a 75 load. The group delay and notch characteristics are shown in Figure 6, though not the reconstruction filter.

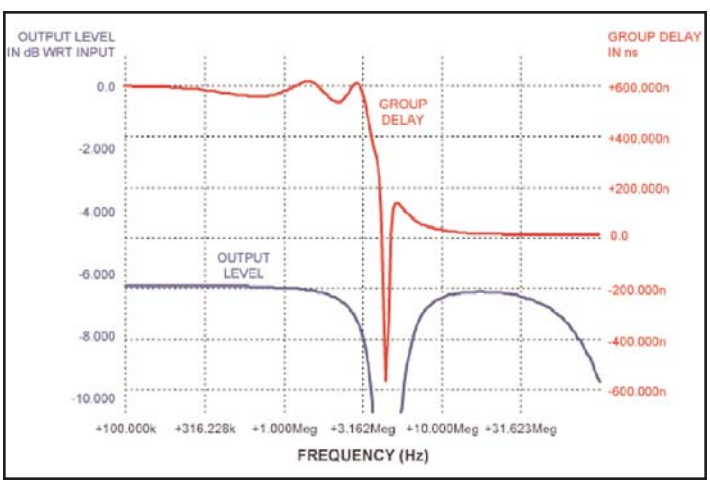

Figure 6. Gain and Group Delay of the Notch Filter and GD Compensation.

Once you've selected the audio and video DACs, or the MPEG decoder and modulator IC, many of the adjustments can be implemented with fixed-value components in the final design. Some values may need adjustment due to layout and parasitic effects. Despite the difficulties in such a design, you can design an A/V interface using op amps and discrete components that will drive baseband outputs on the rear panel as well as on the RF modulator. The benefits are:

- Low-cost, flexible design using standard components
- Minimum number of adjustments
- Meets the requirements of Recommendation ITU-R BT.470-6
- Can be used with any combination of MPEG decoder and RF modulator
- Can be used for NTSC or PAL applications

Notes

[1] To make this compensation possible, both NTSC and PAL place the sound subcarrier above the video's minimum - 3dB bandwidth.

[2] See Maxim application note **"5MHz, 3-Pole, Low-Pass Filter plus Video Line Driver for Consumer Video Applications"**

[3] Some stereo modulators with separate left and right inputs don't require summing the audio. Those require two stages for left and right, as in Figure 4.

[4] **http://perso.wanadoo.fr/jf.fourcadier/television/preaccentuation/preaccentuation_e.htm**

[5] MAX4380 - MAX4383 datasheet

ATVQ

Magnetic Pole DXing:

Recent reports indicate that the Earth's magnetic pole has been rapidly moving from Canada back to Siberia. It was there before, but the Czar's made it move to Canada, now that the USSR is more democratic, it is moving back to civilization. For those DX'ing the magnetic poles, they are easy to find with a magnetized needle, cork and a small container of water. The frequency is below FCC regulations so feel free to use the magnetic resonance band. (about 800000 light years wavelength). Loop antennas work better than long wires at this frequency. By rapidly rotating the loop antenna perpendicular to the field, the effect and strength of the pole can be measured and compared to other locations. Careful measurement of the flux will show that the Earth has numerous peaks and valleys in field strength and that these move and modulate over time. By inducing a precisely matched but opposite field, the Earth field can be cancelled allowing measurement of more distant magnetic bodies. Higher frequencies have been discovered to be useful for long distance communication. A WAP certificate (worked all Poles) is offered for those offering proof of two way communications with both poles, fixed and mobile endorsements. :-) Henry AA9XW

A LINEAR 60 WATT AMPLIFIER FOR 70 CM ATV

By Charles Beener, WB8LGA Email: cbeener@columbus.rr.com
SR 61 2548
MARENGO OH 43334

This article describes a 70 Cm, 120 watt peak output ATV amplifier using two Toshiba S-AU82L (440-470 MHz) RF modules. A single module can deliver 60 watts of output for 50 mw of drive input. Type L-Fets are used in the amplifier thereby reducing the drive needed.

For linear amplitude modulation (AM), the average non-distorted ATV output obtainable is about one third to one half of the PEP output. Otherwise, severe distortion (clipping) occurs.

With one module only, the maximum output is 25 watts. For a strong video RF carrier, 50 watts of average output is needed. Using two modules in parallel, 50 watts average output is obtainable, and with modulation peaks (sync tips) of up to 100 watts!

Two of the S-AU82L amplifiers are used in parallel and must be accurately phased together. A Wilkinson splitter/combiner, consisting of 1/4 wave lines, is used on both the input and output of each module. The lines require carefull and accurate construction. The modules are specified to withstand a 20-to-1 VSWR on the output without catastrophic failure.

The amplifier operates on 12 volts DC. Each unit draws a max. of 15 amperes of current (a total of 30 Amps.). Like most RF modules, there are only 4 external connections required for operation.

Viewing the schematic and photos from left to right:

(1) The RF input pin has a max. of 150 mw of power. The 1/4 wave coax lines must be connected to the connector using very short braid lengths, and directly at the connector. No long lengths here!

(2) The next pin is Vgg bias pin. It is set for 0 - 5.5 VDC. The higher

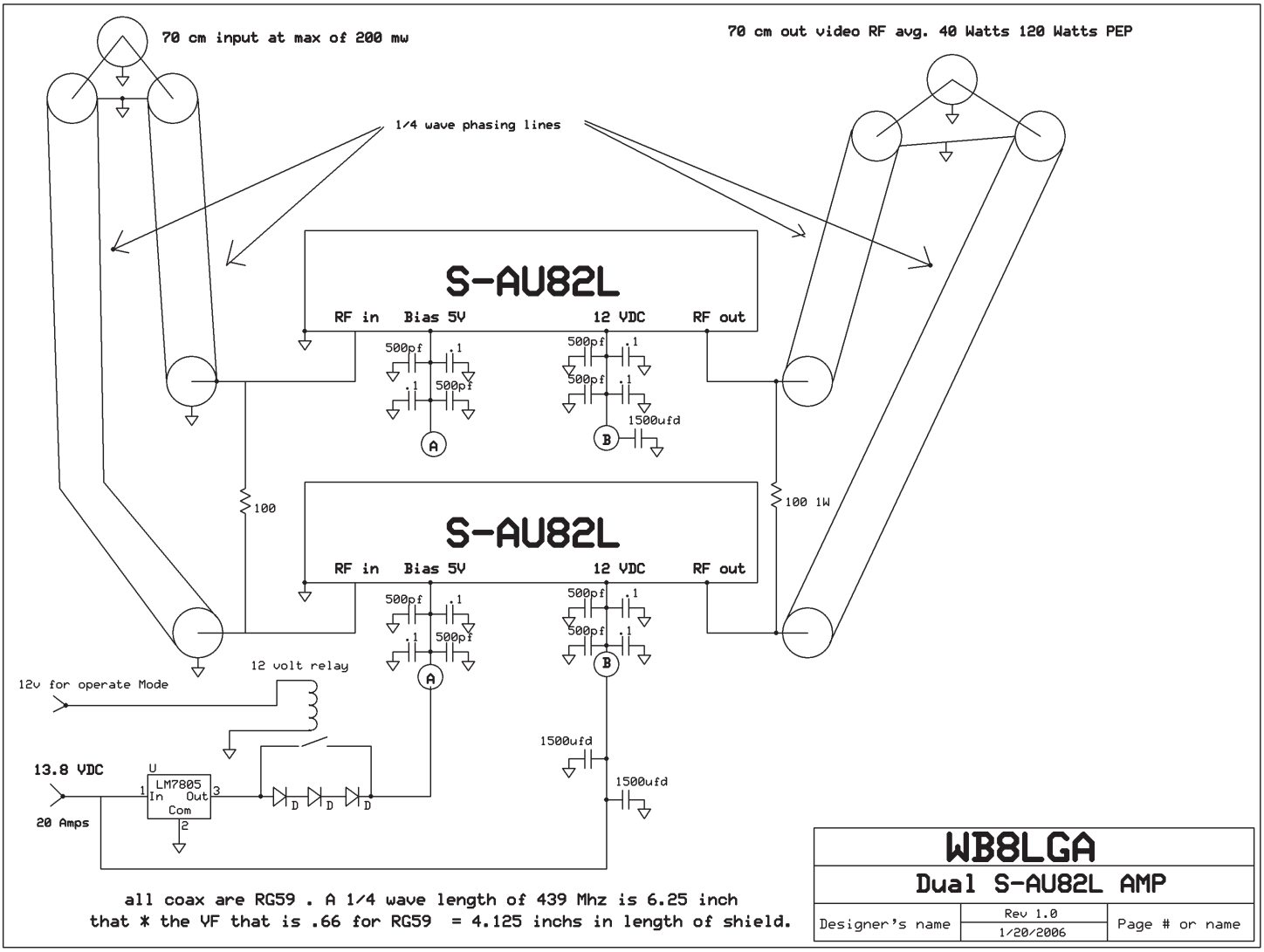

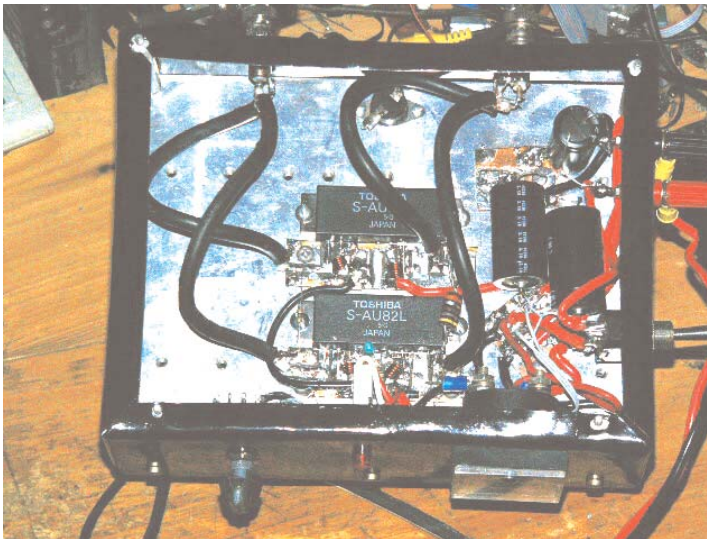

the level, the more the Idle current will be. With 5 volts, it draws around 9 Amps. per module. With one diode in series with the 5 volts, the Vgg voltage level will be 4.3 VDC and the idle current near 6 Amps. Using two diodes in series, and Vgg at 3.6 VDC, the idle current lowers to 3 Amps.

Three diodes (Vgg 2.9 VDC) reduces the idle current to 0.7 Amps. In the standby mode, three diodes in series are used. However, in the operate mode, the diodes are bypassed with a relay and changes the Vgg voltage to 5 VDC.

A hefty 18 amps of current is consumed for two modules. The current doesn't change with or without RF drive. The duty cycle is 100% of the time.

(3) The third pin is the DCV power pin. It needs to be 12-16 VDC from at least a 20 amp supply. Be aware, it is a continuously available 20 ampere supply, not a peak capability of 20 Amps. The conductors from the 12 VDC power supply to the amplifier will be carrying 18 amperes! Using conductors of #16 AWG size or 18 AWG and higher is NOT recommended. Use #12 AWG size or 10 AWG and lower IS recommended.

The output power of the amplifier is considerably reduced when the leads supplying power are of insufficient current carrying capacity. Far better to have excess current carrying capability than lack thereof.

(4) The fourth pin is the RF output. The 1/4 wave coax length again must be connected as close as possible, using very short braid lengths and directly to the connector.

At each module, the center lead of coax must be close to the output pin. The shield needs to be close to the heat sink of the module. This is the ground substrate of the module. Ground lugs are used between the mounting screws and the PC Board ground area.

The PC board is made out of two sided PC board. A Dremel tool with a round grinder blade was used in removing the copper to make the runs. It takes about 5 minutes to make each board.

Using paper thin brass shimming stock, cut it to fit the ground areas of the PC board. Solder it onto the top ground area. Then wrap it around the edge of the PC board onto the bottom side of the board and solder it. It helps to make the PC board a good, low inductance RF ground.

As with most RF amplifier modules, RF lead decoupling is a necessity! Every DCV lead requires it. The physical placement of the two RF modules must also be in close proximity. This helps in keeping the lead length of the Wilkinson resistor short.

The length of the 1/4 wave coax phasing line is 6.2 inches times the velocity factor of the coax used. Typically, it is 66% for RG-59, or about 4.1 inches.

Using a single Vgg supply for both modules, use coax for the Vgg supply to the modules. This minimizes lead coupling.

It is a good idea to place a DC Amp meter on the front panel to indicate the supply current all the times. A 0-25 Amp works fine.

When mounting the modules to the heat sink, MAKE sure to use silicon grease. Mount the modules before you install the PC board and before you solder the PC board to the module. You don't want to damage the module with too much pressure on the leads. After that is completed, the module can be removed using the screws to the PC board without damaging the modules.

The heat sink on the amplifier is 6" by 9" with 1" fins. Mount a 5", low noise, fan on top of the head sink. It starts when power is first applied to the amplifier. The amplifier can operate for half-an-hour without getting hot. For a power supply rated at only 20A, add a fan to it. When the amplifier is in the Operate mode, the cooling fan for the 20 A power supply is turned also.

If you are using a MHWXXX module and it goes bad I would suggest it be replaced with one of the S-AU modules. The PC board will need to be changed, if you would want to go from 10 watts to 60 watts PEP. The modules may be purchased from RF Parts, **www.rfparts.com** for $52. A mere 10 watt brick alone is over $40.

Much thanks for help from Mel(KA8LWR) and Bill (W8DMR) on this article.

To draw the circuit we used the program from **http://www.expresspcb.com/ExpressPCBHtm/Free_schematic_software.htm** The ExpressSch program is a very good and easy to use program.

ATVQ

The FITS 2005 ARHAB Launch

By Paul Verhage - KD4STH Email: Paul.Verhage@boiseschools.org
207 Crestline #3
Caldwell, ID 83605

There's a high power rocket launch every Memorial Day in Central Washington state unlike anything I've ever seen. It's amazing; these guys (there are only a few gals) spend hundreds of dollars to send model rockets to altitudes of a few thousand feet (I believe the highest was around 20,000 feet). If you like this kind of stuff, you know, the smoke, the roar, and the power, and the flame, then you'll want to attend the annual Fire In The Sky (FITS).

Last year I was invited to attend FITS 2005 to show them something a bit different. Robert Nech, one of the sponsors, asked me to teach a BalloonSat class Saturday and launch Sunday. They provided the helium and I provided the balloon and launch equipment. So I left Boise Friday afternoon and arrived in Mansfield, Washington around midnight. The rocket field was just a few miles outside of this very small town but it still took two tries to find it.

The BalloonSat Class

BalloonSats are smaller versions of the near spacecraft I build. Since they only carry simple sensors and data loggers and don't have tracking equipment, they are ideal as a fast near space project for students. With no tracking equipment, BalloonSat rely on a near spacecraft to carry them into near space. So think of a BalloonSat as a student experiment that's getting a ride on the Space Shuttle.

The BalloonSat class was held in a science classroom at the Mansfield high school. It was plenty big and had a couple PCs that we used to program the BalloonSat's data logger and to run flight predictions for the next morning's launch. The BalloonSat class was announced well in advance, but only three brothers from one family attended. The three worked as a team to build and test their BalloonSat. Their BalloonSat was constructed from 1/2" thick polystyrene foam and assembled with hot glue and model airplane tape. The Hobo data logger inside was secured inside their BalloonSat and then the whole thing was tested.

While the legitimate payload, the BalloonSat, was being assembled, I began working on the launch's less then legitimate payload, an Idaho cluster bomb. Everyone knows Idaho, my current residence, is famous for its potatoes. So I took a cheap bag of potato chips and reinforced the top seam. Then I trimmed the bottom seam to half its width, being careful not to nick the seam and breach its air tight seal (the air tight seal keeps the potato chips inside fresh - which is a bit odd when you consider the amount of chemicals they put into potato chips). I finished by rolling the top seam around a 3/16" diameter wooden dowel and secured it with tape. Why the dowel? The dowel is how the Idaho cluster attaches to the near spacecraft without placing stress on the top seam. By early Saturday afternoon the BalloonSat and Idaho cluster bomb where complete. All we had to do was run flight predictions and drive back to the launch field.

Or so I thought. During the class, I gave a short presentation on tomorrow's launch and the near spacecraft. In my talk I introduced the audience to each element of the near space stack and how they fit together. It was here that I realized I hadn't brought a parachute. Great! (or a similar word), now I can't safely recover the near spacecraft. I talked to Robert about this major problem and explained how we couldn't launch. But instead of accepting defeat, Robert went to the launch field and secured a rocket parachute. This was a big orange parachute. Its five foot diameter and very low porosity fabric made it perfect for a near space recovery parachute. FITS 2005 had saved the launch. And not only that, they donated the parachute to my near space program, NearSys.

To get ready for launch all that had to be done was modify the parachute slightly so it could be attached at four points to the top module in the near spacecraft. I have some sewing skills, but didn't have a sewing machine with me. The near space gods must have been smiling, because just a few doors down from the science classroom was the Home Economics class. Inside, on a Saturday, was the Home Ec teacher working on her sewing. She graciously agreed to help out and sewed the modifications into the parachute. Now we were ready. So I went back to the launch field to watch the rocket launches and later had dinner in a nice restaurant in Mansfield.

That night I briefed the FITS attendees and asked that anyone interested in the near space launch meet us at the school early the next morning. Before turning in for the night, I talked to the visiting astronomy club about visually tracking the balloon with their telescopes the next morning. Most of the FITS attendees camped at the launch field and so did I. It was free camping in a quiet field.

Sunday Morning Launch

Sunday morning dawned clear and windless, perfect near space weather. After a quick breakfast I drove to the high school expecting to see only a very few people since I didn't see people awake at the launch site. But when I arrived at the high school, there were lots of people waiting for me. One of them was Dave Dobbins (K7GPS) who performed the tracking for this flight. For those of you not familiar with Dave, he operates the Northwest APRS organization and is one of our local experts.

After the last prediction, the FITS gang drove 12 miles to the launch site. This particular road shoulder was selected to bring

the recovery site close to the launch field. With any luck, the FITS Range Safety officer would hold rocket launches for a few minutes as the near spacecraft landed near by.

The fill and prep of the near spacecraft went pretty fast, especially when you consider I was teaching a group of people who had never attended a near space launch. I spent most of that time giving instructions and encouraging people. In spite of me, they did an excellent job getting the mission ready for launch. Since this was a new group, we did a Hail Mary launch rather than use lanyards. In a Hail Mary the launch team lines up on one side of the stack and supports individual elements (but not holding on to them tightly) in the stack. Before launch they raise their part of the stack high so it will clear their head at release.

Doesn't this look like a near space chorus line? Of course, chorus lines usually have better looking legs.

I asked the youngest child at the launch to give the count down. At zero the balloon was released and climbed away pulling the stack out of everyone's arms. It was another beautiful launch and the crew watched the balloon drift upwards and away for a few minutes. After packing the car with the launch equipment we drove back to the launch field to wait for balloon burst.

Rocket launching was starting when we arrived. I believe these people only stop launching long enough for some sleep (if that much). The amateur astronomers were also awake and some of them had their telescopes trained on the sun. I pointed out the balloon (a tiny dot in the sky by this time) and those with larger telescopes were quick to bring it into view. The public spent about an hour watching the stack through the telescopes. It was quiet impressive to see the stack in such detail. The magnification was high enough to bring out details like the airframes and parachute. The stack was spinning beneath the balloon more than I expected. And it was very noticeable that the balloon was turning transparent was it expanded in diameter. On the ground, balloons are a pale white, but when expanded in near space, they're almost clear. A glint of sunlight highlighted the roundness of the balloon.

Peering at the stack through an 8 inch reflecting telescope. This was one of the most awesome things I've seen through a telescope.

Then there came balloon burst. When I got a chance to see it, the shards of latex were above the opened parachute and appeared very bright. Almost like a cluster of stars above the orange parachute. From the position of the balloon it was apparent the near spacecraft would recover to the southwest of the launch field. So the launch crew headed out once again. The recovery site was about 11 miles away in a wheat field and we got close enough to see the parachute shortly before the near spacecraft landed.

The near spacecraft landed over half a mile from the nearest road. And since it was in a field, we had some walking around to do. Wheat can hide a lot of stuff, but a florescent orange parachute is one thing it's not very good at hiding. As we got close, we could begin to see the parachute draped over the green wheat.

Finally, we've recovered the near spacecraft. Notice the potato chip bag is opened.

Mission Results

After the recovery we drove back to the Mansfield High School and opened the BalloonSat. A PC in the classroom downloaded the data from the Hobo and we graphed the results. I've com-

bined APRS data with the Hobo data to generate the following charts.

Air Temperature

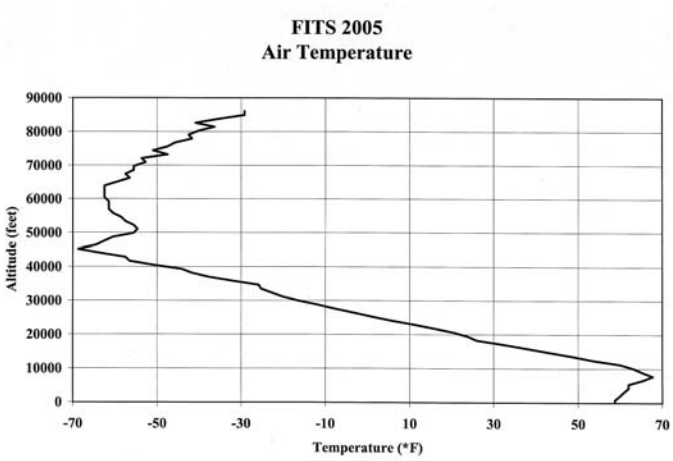

The BalloonSat recorded a temperature inversion at 8,000 feet where the air temperature was 9 degrees warmer than on the surface. Being early spring, the tropopause was still pretty cold. In summer launches I usually see a low temperature in the tropopause of about -60 deg F and in winter I've seen it drop to -90 deg F. During the FITS 2005 mission the tropopause was -68 deg F. You can see that the temperatur'e didn't warm up smoothly with altitude as there was an inversion inside the stratosphere. After reaching a low of -68 deg, the stratosphere warmed up to a comfortable -29 deg F at 88,000 feet. At burst the air temperature plummets. This is most likely a wind chill created by the near spacecraft's dive earthward.

Wind Speed

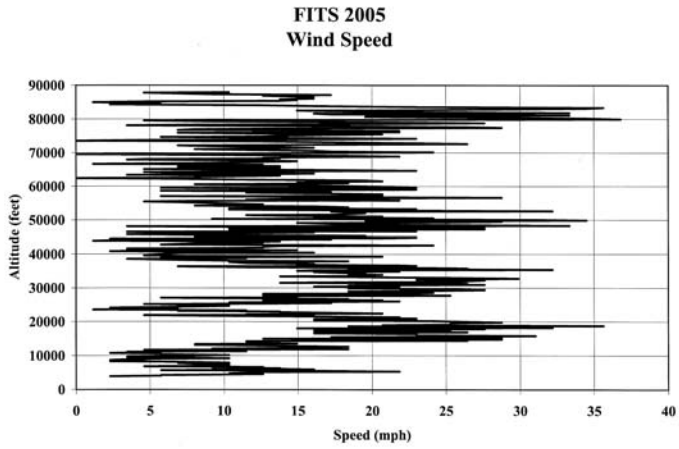

The GPS receiver indicates the current wind speed in its GPRMC sentence. Normally we see the highest wind speeds around 40,000 feet. Sometimes this is deep within the jet stream where speeds can exceed 100 mph. The FITS 2005 mission was odd in that there was no single high speed wind at any altitude. Instead we get three minor peaks. And you'll notice the winds remained between 15 and 35 mph for the entire flight. On the positive side, this means the balloon didn't travel as fast which is why the recovery site was only about 11 miles from the launch site.

Internal Temperature

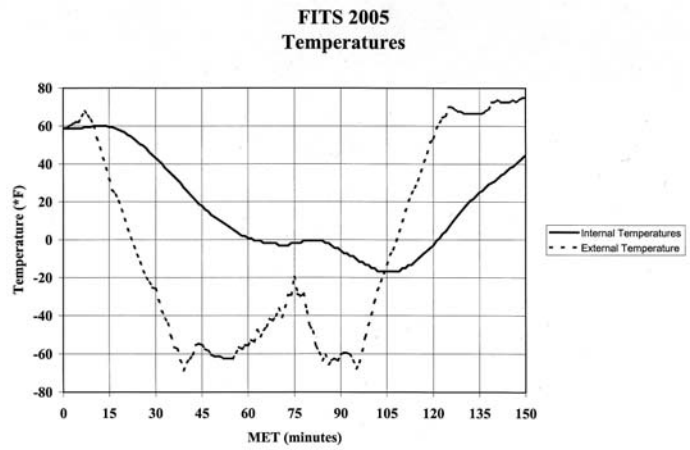

The BalloonSat's internal temperature was recorded with a Hobo data logger. The Hobo is a self-contained data logger that is programmed and downloaded over a PC. It's very easy to use and tiny in size. The external air temperature was measured with a thermistor and recorded as an external voltage by the same Hobo data logger.

The temperature inside the BalloonSat is buffered by its Styrofoam airframe. Internal temperatures remained as much as 60 degrees warmer than outside and they took longer to bottom out. Even during the chilly descent, the internal temperatures didn't drop more than 17 degrees as compared to the external air temperature drop of almost 50 degrees.

Overall it was a very nice flight. The drive was a bit much, but it's not as bad as driving to Seattle. I'm currently planning for the FITS 2006 launch. I hope to make it an annual near space event like GPSL. If so, I'll name it NWSL for Northwest Super Launch. I want to thank Dave Dobbins (K7GPS) of NWAPRS for helping track and recover the near spacecraft. You'll find more information on NWAPRS at their website, **http://nwaprs.info/**. If you live in the Washington state area and would like to attend a launch, please contact me at **paul.verhage@boiseschools.org**. You'll find information on the Hobo series of data loggers at **http://www.onsetcomp.com**. FITS is hosted by Washington Aerospace and you'll find their website at, **http://www.washingtonaerospace.org/**.

* The Fire In The Sky Amateur Radio High Altitude Ballooning Launch

ATVQ

Name Tags by Gene

New from Harlan Technologies - beautiful, colorful, plastic name badges! Available with locking safety pin, magnetic bar, luggage strap, or lanyard.

These colorful badges can be made from our sample artwork, or if you like to be creative, you can make your own. Great to have a club badge with your club logo, or for proper identification with group such as ARES.

Prices
Badge with safety pin.....$10.00
Badge with magnetic bar $12.00
Badge with luggage strap $10.00
Badge with lanyard.....$10.00

You must see our many designs on our web page:
www.hampubs.com
Order your new name tag today!

Name Tags by Gene

Beautiful COLOR name tag / badges with photos, artwork, or plain colored backgrounds.

Design # from book _____ or
Background color _____ or
Picture file name _____

Picture insert #1 _____
Picture insert #2 _____
Picture insert #3 _____

TEXT
Line #1 _____
Line #2 _____
Line #3 _____
Line #4 _____
Line #5 _____
Line #6 _____

Name _____ Call _____
Address _____
City _____State ___ Zip _____
Phone _____
QTY _____ @ $10 = $ _____
QTY _____ @ $12 = $ _____
QTY _____ @ $10 = $ _____
QTY _____ @ $10 = $ _____

Credit Card #_____
Expires _____

Signature _____
SPECIAL
Shipping FREE in the USA till December 31, 2003

Harlan Technologies
5931 Alma Dr.
Rockford, IL 61108
815-398-2683 voice --- 815-398-2688 fax
www.hampubs.com

P. C. Electronics 2522 Paxson Lane Arcadia CA 91007-8537 USA ©2006
Tel: **1-626-447-4565** m-th 8am-5:30pm pst (UTC - 8) Tom (W6ORG) & Mary Ann (WB6YSS)
24 hr FAX order line 1-626-447-0489 Email: Tom6org@hamtv.com
Web site: http://www.hamtv.com

ELECTRONICS

W6ORGy Notes

©April 2006

NEW Downeast Microwave 30 Watt pep 23cm Linear Amp

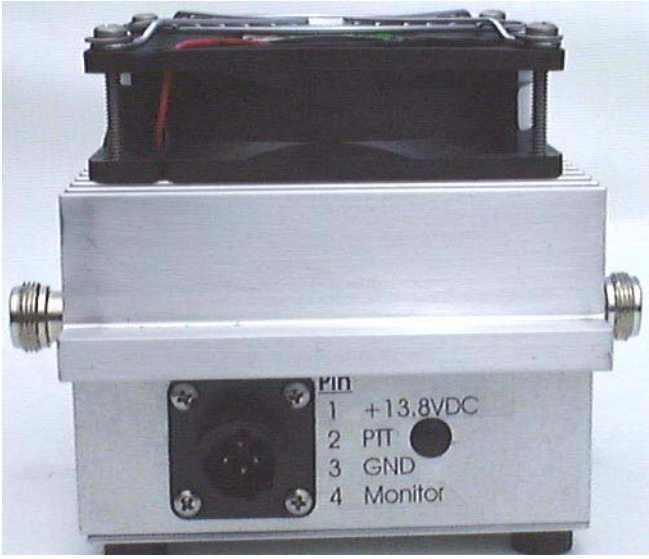

DEMI is producing a series of 23 cm linear amplifiers built around the Mitsubishi RA18H1213G power MOSFET module - 30, 60 and 120 Watt using 1, 2 or 4 of these bricks. The module is rated at 18 Watts by Mitsubishi and is very linear with low IM up to that level. DEMI is rating the amp at over 30 Watts pep on all modes including ATV with just a little sync stretching using the standard set up procedure (see AM ATV Amp Setup on our Application Note web page). It works out great that when the sync tip is set at 30 Watts, the pedestal is then set to 18 Watts which means all the picture information below the blanking will be in the very linear portion of the bricks gain curve.

This single brick amp can be driven directly with 50 mW from our TXA5-70S-23 ATV exciter modulator board which is used in the RTX23-.1 ATV transmitter but for the 2 and 4 brick amps you can use the RTX23-3.

The bricks gain rolls of quite a bit below 1270 MHz, and was verified at DEMI. We got more than 40 Watts pep out at 1289.25 MHz but 25 at 1253.25 MHz. The roll off is all inside the brick. We tried some external fine peaking by adding a .5-3 pF variable cap 1/2 wave out on the input strip line (at the brick side of C1) and also part way on the output strip line. We were able to get a little more power out, and improve the low end gain tilt a bit.

The monitor output on this amp is a simple diode detector which is brought out on one of the cable leads. This positive DC voltage is an indicator of RF output and can be used for drive and pedestal setup, but I found that if a scope is placed on the white monitor lead rather than a DC Voltmeter, you could also see the modulated video waveform. For ATV use, it would be simple to reverse the diode and connect to an emitter follower so as to drive a video monitor. Along this line, we are looking into making available a small add on board that can be added to most any amplifier.

Power supply requirements are a regulated 12 to 14 Vdc at up to 10 Amps. With no drive the current draw was 4 Amps and did go to 10 Amps at full drive. The power lead resistance and inductance were significant enough with the 10 Amp peaks on the sync tip that there was some sync tip droop. I was able to cure that with a 330 mF 25 V electrolytic which can be seen in the center of the photo. The cap will be in the production units. DEMI will have two versions: 2330PA tuned to cover 1270 to 1300 MHz and 2330PATV tuned to cover 1250 to 1290 MHz. Built price will be $240 and $190 in kit form including the fan - a good deal for a fine all mode 23 cm linear amp, www.downeastmicrowave.com

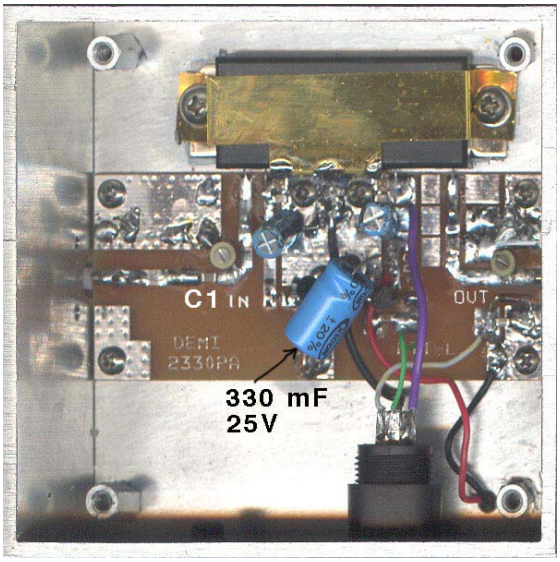

ATVQ TO PAY FOR ARTICLES!

Payment for Technical Articles

ATVQ will pay for certain articles that it publishes. I will outline the policy here, but it will be subject to change as needed to make sure that ATVQ continues to be an ongoing publication. ATVQ will pay $25.00 for technical articles that are published and are a minimum of 2 pages. While this is not a great amount, I hope it will encourage more technical type articles to be written. Exceptions will be articles that are written by a manufacturer/seller of equipment that is being written about. While I do not want to discourage this type of article, the article itself is an advertisement of the product. Articles from clubs will be encouraged, and I would expect they would like to share their information with the ATVQ readership. Information gathered from the Internet will not be paid for and is mostly small filler items.

Ideas

Do you have an idea for an article that you've said to yourself that you wanted to write, but never did. Feel free to check with us to see if it is of interest, or write and send it in. No guarantees that it will get published, but if you don't try, you will never know. I'll be looking to see what you can do!

ATVQ

CONTRIBUTORS GUIDE

Preferred method of receiving articles is from **Microsoft Word**, however **Wordperfect** is OK too. Next preference would be **ASKII text**, followed by **typewritten** or **hand written** (clearly). Diagrams or pictures (B&W or Color) can be sent in hard copy, or if you scan them in, save to PCX or JPG formats (actually I can read about anything). If you send a computer disk, make sure it is PC (not MAC) format.

When sending in articles in Microsoft Word, please SAVE with FASTSAVE OFF and save in Word 6 format. Also, articles written in any word processor, consider what will happen when it is re-formatted to fit the style that I might put it in. An example would be setting up tables or adding figures into the article. They can be very hard to strip out. If possible, put the tables, figures, each in a file by itself. This will help me to be able to import into the magazine format.

Articles can be sent to:
ATVQ, 5931 Alma Dr., Rockford, IL 61108

or to our email address: **atvq@hampubs.com**
Also note our web page address: **http://www.hampubs.com**

ATVQ

Thanks to all the fine stores that carry Amateur Television Quarterly

Amateur Radio Toy Store
117 West Wesley Street
Wheaton, IL 60187

Burnaby Radio Comm Ltd.
4257 E. Hastings St.
Burnaby, BC Canada V5C 2J5

Dave's Hobby Shop
600 Main St.
Van Buren, AR

Ham Radio Outlet
1939 W. Dunlap Ave.
Phoenix, AZ 85021

Ham Radio Outlet
6071 Buford Hwy
Atlanta, GA 30340

Ham Radio Outlet
224 N. Broadway
Salem, NH 03079

Ham Radio Outlet
2492 W. Victory Bl.
Burbank, CA 91506

Ham Radio Outlet
933 N. Euclid St.
Anaheim, CA 92801

Radio City
2663 County Rd I
Mounds View, MN 55112

The Radio Place
5675 A Power Inn Rd.
Sacramento, CA 95824

Do you know of a store that would like to carry ATVQ? Please let us know and we will contact them.

ADVERTISERS INDEX

Please mention that you saw it in
Amateur Television Quarterly!

ATVQ on the Newsstands

If you find a store willing to carry ATVQ on their shelves, we will extend your subscription by one year. In the case that two people turn in the same store, the first one wins! Offer subject to change at any time, but not likely to!

Harlan Technologies

ATV TOYS

Limited Quantities

Great cameras for ATV and Security

Color Camera - DV-4100C

Sharp 1/4" CCD
NTSC
420 Line
1.0 Lux - F1.2
1 Vp-p 75 Ω
Auto White Balance
S/N Ratio - More than 46 db
Electronic Shutter - 1/60-1/1000,000 Sec
Lens - C/CS Mount - zoom 6-15 mm - f1.4
Power - 12V±10% DC - 100 ma.
Small size - 40x40x54mm

SALE! $119

Color Camera - DV-4400CDN

Sony 1/3" CCD
NTSC
420 Line
0.5 Lux Day (Color) - 0.01 Lux Night (B&W) - F1.2
1 Vp-p 75 Ω
Auto White Balance
S/N Ratio - More than 46 db
Electronic Shutter - 1/60-1/1000,000 Sec
Lens - C/CS Mount - zoom 6-15 mm - f1.4
Power - 12V±10% DC - 100 ma.
Small size - 40x40x54mm

SALE! $169

Weatherproof Color Camera - DV-262CW

Sharp 1/3" CCD
NTSC
420 Line
1.0 Lux
1 Vp-p 75 Ω
Auto White Balance
S/N Ratio - More than 46 db
Electronic Shutter - 1/50-1/100,000 Sec
6.0 mm - F1.2 lens
Power - 12V±10% DC - 100 ma.
Small size - 25x25 mm

SALE! $119

Minature Pinhole Color Camera
Color CCTV Camera - DV-3225CP1

Sharp 1/3" CCD
NTSC
420 Line
1.0 Lux
1 Vp-p 75 Ω
Auto White Balance
S/N Ratio - More than 46 db
Electronic Shutter - 1/50-1/100,000 Sec
3.7 mm cone pinhole lens
Power - 12V±10% DC - 100 ma.
Small size - 25x25 mm

SALE! $109

5931 Alma Dr., Rockford, Illinois 61108-2409
Tel: 815-398-2683 - Fax: 815-398-2688
www.hampubs.com

ATV Research Inc.

Wholesale Only

Video Catalog

2005B

CCTV * MATV * SMATV
since 1964

Request your free 2005B Catalog TODAY!

When it comes to video...we think outside the box! We invite you to join us!

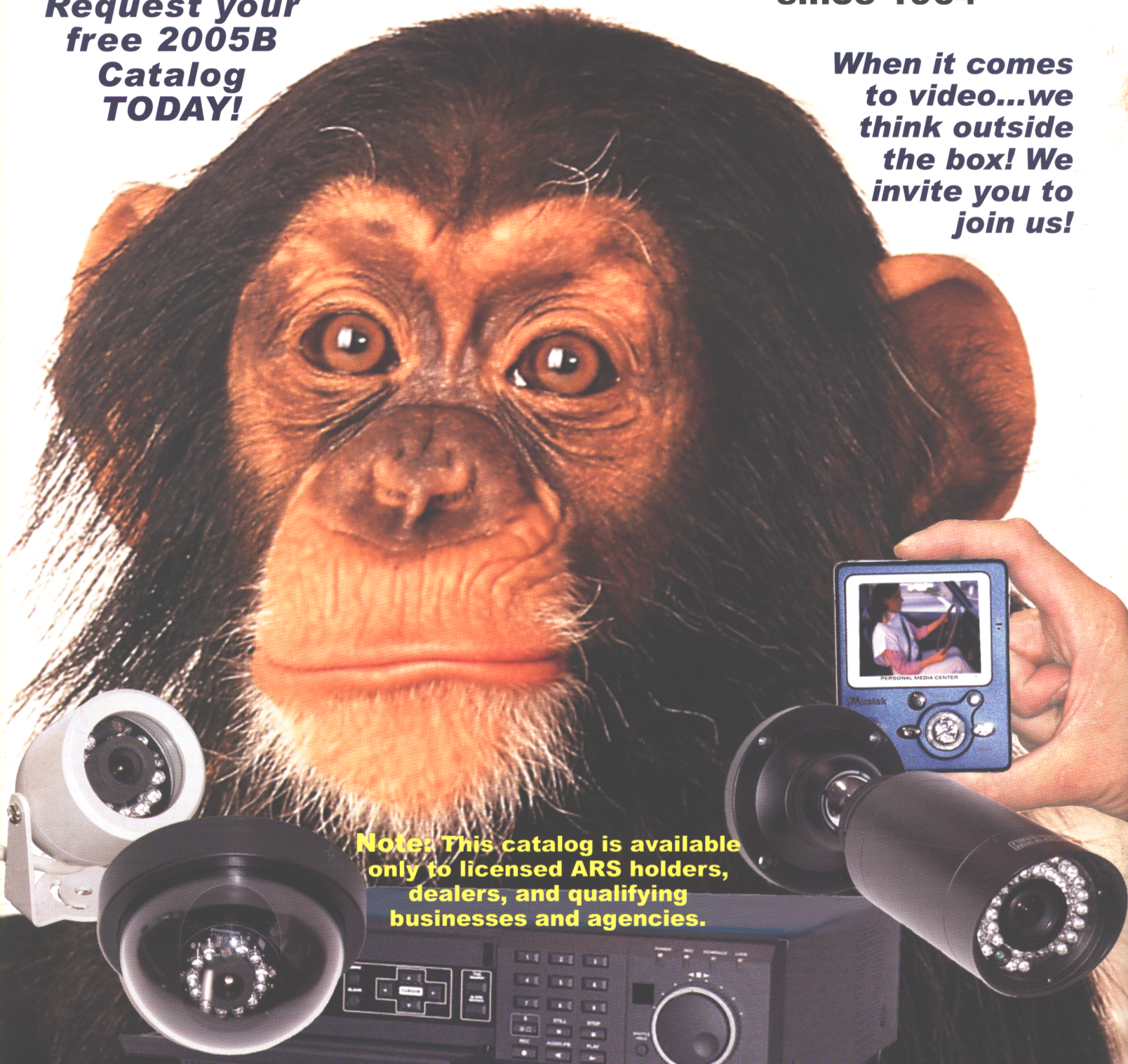

Note: This catalog is available only to licensed ARS holders, dealers, and qualifying businesses and agencies.

(800) 392-3922 or (402) 987-3771 24 hr fax: (402) 987-3709
Website: www.atvresearch.com Email: sales@atvresearch.com