Spring 2000

Volume 13 - No 2

ISSN 1042-198X
USPS 003-353

SINGLE ISSUE
$4.95 USA
$5.50 CANADA
$7.00 ELSEWHERE

Amateur Television Quarterly

More UP - UP AND AWAY. ATV from a hot air balloon!

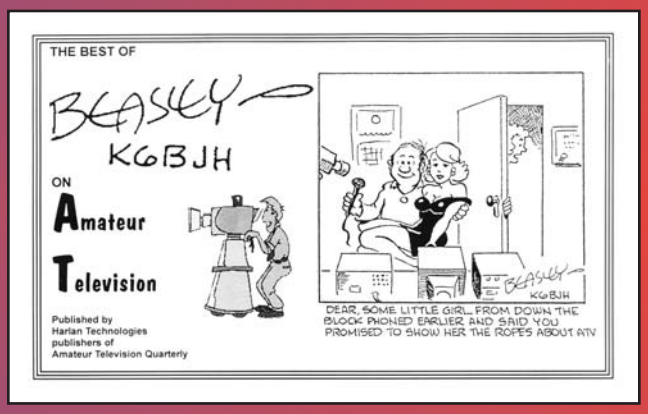

HOT OFF THE PRESS NEW CARTOON BOOK! Everyone loves Beasley cartoons. Here is the "*BEST of BEASLEY on Amateur Television*"!

WOW! Now this looks like fun! Read all about ATV from a HANG GLIDER INSIDE!

P. C. Electronics 2522 Paxson Lane Arcadia CA 91007-8537 USA ©2000
Tel: **1-626-447-4565** m-th 8am-5:30pm pst (UTC - 8) Tom (W6ORG) & Mary Ann (WB6YSS) O'Hara
24 hr FAX order line 1-626-447-0489 Email: tom@hamtv.com
Web site: www.hamtv.com

PC ELECTRONICS
Est. 1965

NEW TC70-20 ATV TRANSCEIVER

Get the ATV Bug !

"Plug in and Play ATV"

Same unit but twice the power as reviewed in Dec. 1998 QST

ONLY

$529

Total price shipped within 24 hrs of your call UPS surface in the contiguous USA, Visa/MC

NOW Twice the Power Output!

All in one box

420-450 MHz BAND
RUGGED
RELIABLE
IN STOCK

≥20 Watts p.e.p. Output
-Adjustable, 2 to 25 watts pep Typical

Made in USA

TC70-20 Transceiver lets you get on ATV right away with all the power most will need in one box - *100+ Miles line of sight DX

ATV is no more difficult or different than any voice mode except that you also plug in your camcorder to transmit, and your TV set to receive the picture. That's it - you're seeing as well as talking to other hams live and in color! No other radios needed.

You can show the shack, home video tapes, zoom in and describe projects, show computer graphics and programs, repeat SSTV or even Space Shuttle Video and audio if you have a TVRO. Go portable or mobile, do public service events, RACES, AREC, CAP, even transmit the radio club meetings to those hams that can't make it.

*DX is over 100 miles snow free line of sight between 14 dBd beams and using 100 ft. of Belden 9913 low loss coax simplex. Check the ARRL Repeater Directory for ATV repeaters near you or call us for info on other ATVers in your area to find out frequencies, antenna polarization and activities.

Transmitting equipment sold only to licensed Tech class or higher Radio Amateurs, verified in the Callbook or on the web, and used for legal purposes per 47 CFR part 97 of the FCC Rules.

* Adjustable peak envelope power RF output
  Typical range from 2 to 25W and sync stretcher allows proper adjustment to fully drive the Teletec DXP-U150 linear amp to full 150 Watts p.e.p., or more without sync or audio clipping.
* Separate mic and line audio volume controls
  Allows voice over commenting when showing video tapes. Mini jack for low Z dynamic mic & submini PTL (push to look).
* Rugged 7.5 x 7.5 x 2.7" black die cast alum. box
  Continuous duty for public service applications. 3.5 lbs.
* True Final RF detected video monitor output
  If you have a video monitor, it lets you set the video gain control for actual white level. Camera video is at this phono jack during receive for focus & lighting set up before transmitting.

Sensitive low noise GaAsfet downconverter tunes whole 420-450 MHz 70cm band down to your TV channel 2, 3 or 4. The rear panel has a type N antenna jack and type F jack to the TV set.

Front panel phono jacks accept composite video and line audio from your camcorder or VCR. One crystal included; specify 439.25, 434.0, 427.25 or 426.25 - F1. 2nd switch selectable crystal, F2, add $20. Requires 12-14 Vdc @ 4 Amps. 100% duty cycle.

COMPLETE 420-450 MHz 70cm BAND ATV STATION

Your TV set.
See who you are talking to!

+

Your video camera or camcorder

+

TC70-20....$529
ATV Transceiver
20 Watts p.e.p. min.
Downconverter tunes 420-450 MHz
Req. 12-14 Vdc @ 3A power supply
Comes with one crystal, 2ndadd $20
Specify transmit frequency(s):
439.25, 434.0, 427.25 or 426.25 MHz

+

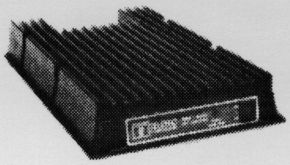

Teletec *150W* amp

Optional 150 Watt Amplifier
Teletec DXP-U150 150W pep.....$429
Amps require their own 13.8 Vdc
25 Amp regulated power supply and external fan for key down >5 minutes.

+

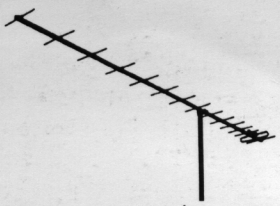

Antennas - see catalogue page 5

Dir. Sys. DSFO ATV-25	**16 dBd**	**$149**
KLM440-6X Yagi end mtg	**8.9 dBd**	**$65**
Diamond X501XA 70cm/2M	**Vert omni**	**$199**
Diamond F718L Vert omni	**9 dBd**	**$238**
Diamond NR-770H mob/port	**5.5dBd**	**$59**

Remember when comparing prices, ours include UPS surface shipping in contiguous USA. **1/2000**

Hams: Call or email for your full 10 page ATV Catalogue or see our web site http://www.hamtv.com

AMATEUR TELEVISION QUARTERLY

Published by
Harlan Technologies

Publisher/Editor
Gene Harlan - WB9MMM

Editorial Office
5931 Alma Dr.
Rockford, IL 61108
(815) 398-2683 - voice
(815) 398-2688 - fax
Internet:
http://www.hampubs.com
email:
ATVQ@hampubs.com

Sales
Shari Harlan - KB9SH
1-800-557-9469

Amateur Television Quarterly (ISSN 1042-198X) is published quarterly, in January, April, July, and October for $18.00 per year by Harlan Technologies, 5931 Alma Dr., Rockford, Illinois 61108-2409. Periodicals Postage Paid at Rockford, IL and additional mailing offices. POSTMASTER: Send address changes to Amateur Television Quarterly, 5931 Alma Dr., Rockford, IL 61108.

Amateur Television Quarterly is available by subscription for $18.00/yr in the USA; $20.00/yr in Canada; $26.00/yr elsewhere. Single issues $4.95/USA; $5.50/Canada; $7.00 elsewhere. Send all address changes to Amateur Television Quarterly, 5931 Alma Dr., Rockford, IL 61108

Amateur Television Quarterly

TABLE OF CONTENTS

Beasley Book & Dayton Is Coming

by Gene Harlan - WB9MMM - email: ATVQ@hampubs.com
5931 Alma Dr.
Rockford, IL 61108

I am very excited to be announcing the new cartoon book "The Best of Beasley on Amateur Television" in this issue. We have all enjoyed Beasley cartoons over the years, not only in ATVQ, but in QST, CQ, 73, World Radio, and many other ham radio publications. He shows that he understands human nature and ham radio operators in his artwork.

To make the book, I went through all the materials from previous years of ATVQ, added those that we used when we had CyberHam Magazine, and when I talked to Robert, he ended up sending even more to choose from. So, I'm sure you have not seen them all.

I called Robert the other day, and informed him that I was expecting it back from the printer any day. It was probably a surprise of sorts, as it was over a year ago that I talked to him about doing it. I asked him if he would mind autographing a few for the Dayton Hamvention. This was suggested by Art Towslee, WA8RMC, as I have promised to give a couple as prizes for the Friday night ATNA ATV meeting. He agreed, of course, and when I received them from the printer, I shipped some for him to sign. This will make an already great cartoon book extra special.

I will have the extra signed books at our booth (361) in Dayton. They will be sold on a first come basis, so be sure to visit us early before the signed ones are all gone. For information on how to order by mail, please check page 35 of this issue.

Since we will have a booth this year at Dayton, we are busy putting things together. Man, it is a lot of work making CDs, signs, and just gathering things together. Our basement is starting to look like a store! Harlan Technologies has bought all the remaining copies of ATV Secrets Vol 1 & 2, and they should last for a while, but it is time to start thinking as to updating the material for a replacement book. This book set has been the main ATV publication for as many years as I remember and is sure full of GREAT ATV information. I have to commend Henry for taking the task and outlaying the $$$ in the beginning to publish this information. Now that I have published the cartoon book, I get a feel for what he did.

I hope to see many of you at the Dayton Hamvention. I hope that you will stop by our booth and say hi. Bring a friend that is interested in ATV or satellite communications. Our newsletter, OSCAR Satellite Report is holding its' own, with the readers just waiting for Phase 3D to go up, hopefully in July. We will have to just wait and see. Hope so...

See you at Dayton. - Gene Harlan - WB9MMM ATVQ

And There Were Letters!

Gene,

Very good issue of ATVQ this month. Found the article on the slot antenna very interesting as well as the ARCC/CAATN band plan article (p. 26.) I have a question on the band plan as printed. I note that the list shows 420 to 426 for repeater outputs and 425 to 431 for repeater inputs. Is this a typo? This would put the repeater output aural frequency and the input visual frequency 500 KHz apart.

Thanks in advance. Dan Rapak - WA3ATV

(And, of course, I let the expert answer - Gene)

Dan and Gene

No not a typo. We are using 426.25 as primary input for paring with 439.25 output. The 421.25 output is for cross band input from 900 or 1200 MHz. The 439.25 MHz became unusable as an input in the Baltimore ,Washington DC, York and Philadelphia PA area due to the influx of high power FM Repeater outputs within the ATV band pass. of 439.25 long established as ATV. Hence we reversed the in and outs which eliminated the de sense to the ATV repeaters.

We still have individual ATV'ers with reception problems but not ALL of the repeater users as before. The ATV AM signal causes NO interference to the FM users unless within a 1/2 mile of the ATV repeater output.

Not a perfect solution but we can live with it. This way we have two 70 cm outputs with at least one 70 cm input that is protected.

Another plan considered was to use 434 MHz as an input. We received no support for this since the ARCC indicated they believed this to be in violation of Part 97. I know it is technical feasible as it is being widely used in other areas of the country.

If we can get some support I am in favor of gathering engineering data and presenting it to the FCC for a proposal. At the recent CAATN meeting former FCC employee and Chief Engineer for a commercial TV station as well as ATV'er Bob Curry, KC3VO suggested we apply for temporary authority from the FCC to conduct tests using a beacon on 434.

Any interest out there? John Shaffer - W3SST ATVQ

ATVQ TO PAY FOR ARTICLES!

Payment for Technical Articles

ATVQ will pay for certain articles that it publishes. I will outline the policy here, but it will be subject to change as needed to make sure that ATVQ continues to be an ongoing publication. ATVQ will pay $25.00 for technical articles that are published and are a minimum of 2 pages. While this is not a great amount, it is a starting point and I hope it will encourage more technical type articles to be written. Exceptions will be articles that are written by a manufacturer/seller of equipment that is being written about. While I do not want to discourage this type of article, the article itself is an advertisement of the product. Articles from clubs will be encouraged, and I would expect they would like to share their information with the ATVQ readership. Information gathered from the Internet will not be paid for and is mostly small filler items.

Ideas

Do you have an idea for an article that you've said to yourself that you wanted to write, but never did. Feel free to check with us to see if it is of interest, or write and send it in. No guarantees that it will get published, but if you don't try, you will never know. I'll be looking to see what you can do! ATVQ

AUTHORS GUIDE

Preferred method of receiving articles is from **Microsoft Word**, however **Wordperfect** is OK too. Next preference would be **ASKII text**, followed by **typewritten** or **hand written** (clearly). Diagrams or pictures (B&W or Color) can be sent in hard copy, or if you scan them in, save to PCX or JPG formats (actually I can read about anything). If you send a computer disk, make sure it is PC (not MAC) format.

When sending in articles in Microsoft Word, please SAVE with FASTSAVE OFF and save in Word 6 format. Also, articles written in any word processor, consider what will happen when it is re-formatted to fit the style that I might put it in. An example would be setting up tables or adding figures into the article. They can be very hard to strip out. If possible, put the tables, figures, each in a file by itself. This will help me to be able to import into the magazine format.

Articles can be sent to: **ATVQ, 5931 Alma Dr., Rockford, IL 61108**
or to our email address: **atvq@hampubs.com**
Also note our web page address: **http://www.hampubs.com** ATVQ

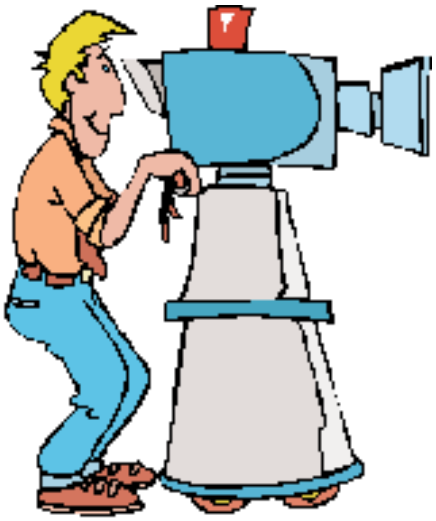

Did you hear about the guy who wanted to be a great writer? He wanted to strongly influence millions of readers, to stir their most powerful emotions, to move them to tears, to laughter, even to rage.

So, he got a job writing error messages at Microsoft.

ATVQ

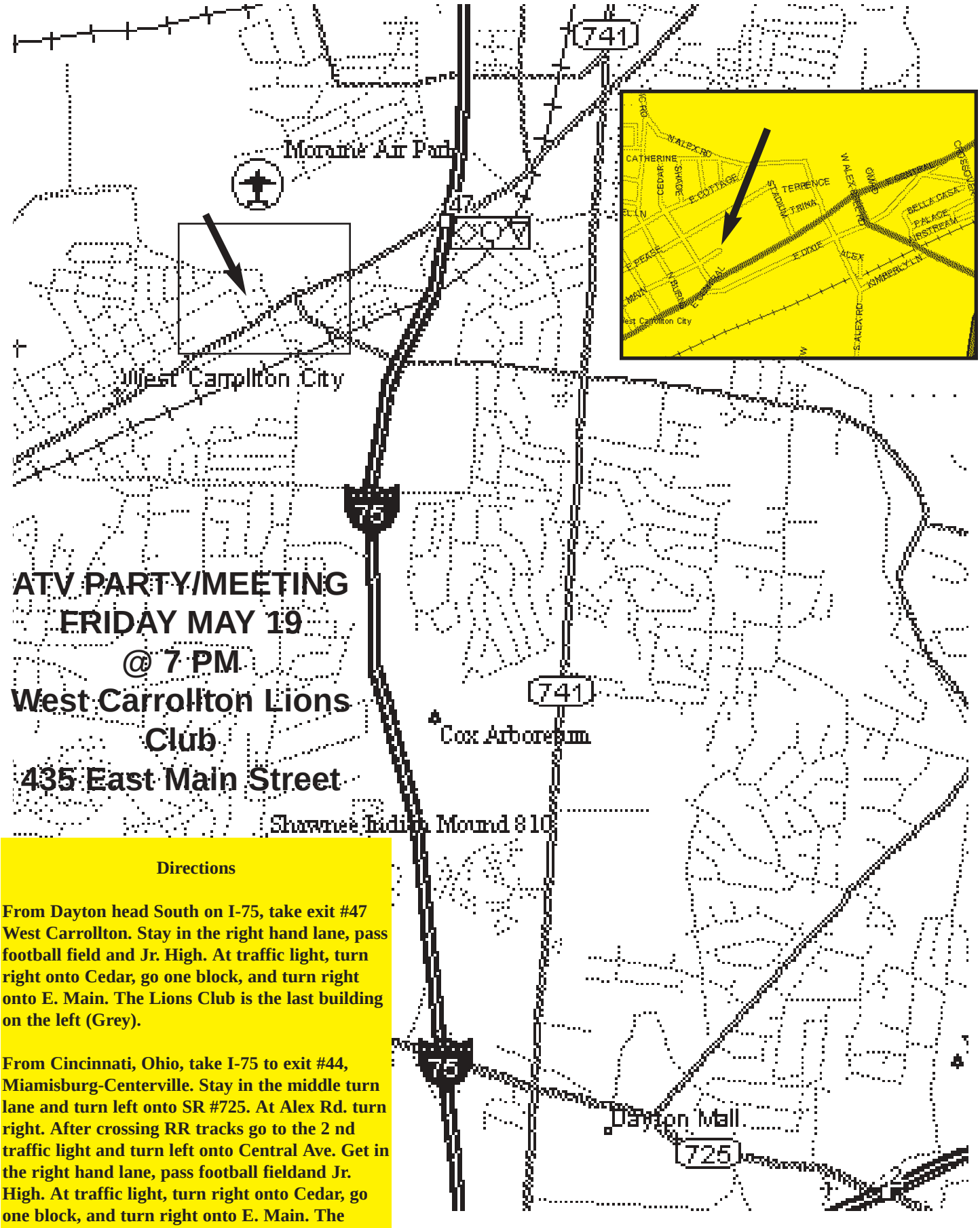

ATV PARTY/MEETING
FRIDAY MAY 19
@ 7 PM
West Carrollton Lions Club
435 East Main Street

Directions

From Dayton head South on I-75, take exit #47 West Carrollton. Stay in the right hand lane, pass football field and Jr. High. At traffic light, turn right onto Cedar, go one block, and turn right onto E. Main. The Lions Club is the last building on the left (Grey).

From Cincinnati, Ohio, take I-75 to exit #44, Miamisburg-Centerville. Stay in the middle turn lane and turn left onto SR #725. At Alex Rd. turn right. After crossing RR tracks go to the 2 nd traffic light and turn left onto Central Ave. Get in the right hand lane, pass football fieldand Jr. High. At traffic light, turn right onto Cedar, go one block, and turn right onto E. Main. The Lions Club is the last building on the left (Grey)

Amateur Television at the Dayton Hamvention

For those of you planning on attending the Dayton Hamvention, you are in for a full weekend of ATV activities. Starting on Friday night, the ATNA (Amateur Television in North America) annual program is planned. Here is a quick summary of the ATV Events for May 2000 at Dayton.

Friday 19 May 1999 - 7 PM to 11 PM

ATNA FAST SCAN ATV meeting doors open at 7:00 pm at the West Carrolton Lions Club (see map). The Annual Fast Scan Meeting will be held Friday evening 19 May from 1900-2300. The sponsor is ATNA, Amateur Television of North America. There will be technical talks, prizes, snacks, and time for informal discussions. The meeting will be held, as before, at the:

427 East Main Street
West Carrolton, Ohio.
Talk-in on 144.34 FM simplex
Telephone during meeting night: 859-7276

The Point of Contact is John Hey, W8STB, at EMAIL **heyjo@netzero.net**

Saturday Events

The Fast Scan and Slow Scan forums on Saturday 20 May 2000 will NOT be held in the Hara Arena. They have been moved to the Meadowdale High School located at 4417 Williamson Drive, about one mile south of the Hara Arena.

Buses will take participants from Hara Arena to the school and return them to Hara. The Slow Scan Forum starts at 1045 on Saturday and the Fast Scan Forum is from 1:00 PM to 3 PM.

Moderator: **Bill Parker, W8DMR**

Speakers:
Bill Brown, WB8ELK - "*More High-Flying Adventures*" - Highlights of an ATV balloon experiment to capture the Lenoids meteor storm on video from the stratosphere.
Bill Parker, W8DMR - "*Getting Started in Amateur Television"* - Without any external converters, see ATV pictures on your home TV set, where to look, when to look, and what you may see. Video sources, antennas, transmitters, and more.

Saturday Night Event

The Annual Saturday Night ATNA ATVers Dinner will be held at 1830 on 20 May at the:

Down The Pike Restaurant
1603 S. Alex Rd
West Carrollton, OH

For meal planning, we must have a count of planned attendees. Those who can plan ahead should advise John Hey W8STB, by EMAIL at **heyjo@netzero.net**.

If you can't plan that far in advance , please advise John the best way as soon as you can. His phone is 1-937-859-5295

John Jaminet - W3HMS
Pres ATNA

ATVQ

Glider-Cam ATV Flies on a Hang Glider

By John Wiseman, KE3QG- Email: jwiseman@ati.com
Logic Design Manager
ATI Research
6 Terry Drive
Newtown, PA 18940

Introduction

Two separate things really contributed to my interest in pursuing this project. First of all, I've been interested in getting involved with amateur television (ATV) in some form or another for quite some time now. I've worked with video technology at a professional level for many years, and have been an amateur radio hobbyist for a long time as well. Second, I noticed a need for a system like this in one of my other hobbies, hang gliding.

Hang gliding is truly an indescribable experience. It is about as close as humans can get to achieving bird-like free-flight, and it is a shame that more people don't get to experience the unbelievable thrill of actually leaving a mountaintop and gliding over the trees, or looking straight down from several thousand feet with only the sound of the air moving past to listen to. I have flown from several sites with friends and family present, and their reactions are generally the same. The launchings and the landings they can relate to, but the in-flight experiences are totally lost on them as viewers, mainly because of the sheer distances involved. Even when straight overhead, a hang glider and pilot are tiny when viewed from distances of several thousand feet or more, and of course the perspective is very different when looking up from the ground, instead of the other way around. Video cameras can help demonstrate the sport to spectators, and to give them a feel for what it is that we experience when we fly, but that of course must be done after-the-fact. A large percentage of hang glider pilots are licensed amateurs and fly with handheld 2-meter radios, but usually these transmissions are very short, to-the-point, and technically oriented, such as where thermals might be found or what direction they may be heading on a cross-country flight. What is much more useful is to have a real-time video transmission from the pilot to family and friends watching on the ground, where the experience can be shared as it is actually happening. As such, the idea for Glider-Cam was born.

A wide-angle view of the glider with the Glider-Cam equipment installed. For reference, the wingspan is about 31 feet.

A view of the mounting position for the glider antenna. This same position on the opposite wings crossbar also provides a good alternate place to mount the camera.

Since I had no experience with ATV before this, I had to do some research on the subject. I started by reading past issues of Amateur Television Quarterly, as well as several websites dealing with the subject. I was able to find quite a few interesting and informative descriptions of RC aircraft ATV experiments that were very useful. Of course, the first things I learned where how complicated it would be coming up to speed from scratch, and how little I knew about the subject. I decided that simplicity would be the best bet, especially since I would be using this system in a flight environment. As such, I looked mainly at conservative 70-cm AM-based approaches to build my system from.

Technical Details

I started the construction phase of this project by choosing a transmitter. After reviewing what was available, I decided that building a transmitter from a kit might be enjoyable, and at the same time I could save a little bit of money. I purchased the North Country Radio ATV12-440 MK2 2-watt television transmitter kit with a 439.25 MHz. crystal, and went at it with my tool kit and soldering iron. A few nights later, I was tuning and testing the transmitter with my camcorder and a homemade dipole beaming into a portable TV set. Fortunately, I was able to use a high-speed oscilloscope, so tuning and peaking of the various filters went fairly quickly and easily.

Since I'm a video technology freak, I couldn't resist adding a video overlay board to my system so that I could display my amateur call letters as well as some other useful information relating to the flights I would be making. This board is not necessary, but in my particular application the additional size and weight are fairly insignificant, so I went ahead and added it, packaging it in a separate metal enclosure from the transmitter. I desired quick and easy programming capability, along with small size and low power consumption. I considered a homebrew solution for this function, but after researching what was commercially available, I found all I wanted and more in the Intuitive Circuits OSD-ID PC-programmable unit. With this board, I can use a laptop PC to design the overlay screen and program the unit afterwards. As the interface between the overlay and the PC is via a serial cable, it is possible to program the unit while it is on the glider, but I have not had the need to do so yet myself. I prefer to program it with the correct location and date the night before going on a flying trip, but the capability is there nevertheless.

ADVERTISE IN ATVQ!

ADVERTISING RATES AND DEADLINES

DEADLINES

COVER DATE	COPY DEADLINE	TO Printer	MAILING DATE
WINTER	January 1	January 15	January 25
SPRING	April 1	April 15	April 25
SUMMER	July 1	July 15	July 25
FALL	October 1	October 15	October 25

While we will try to adhere as close as possible to the above dates, we reserve the right to adjust as needed.

If material is going to be late, please call to check if it will meet our schedule. We will try to accommodate everyone as best as we can.

Camera ready art or negative film right reading down are acceptable.

Trim Size: 8 1/2 x 10 7/8
Bleed Size: 1/8” beyond trim
Live matter: 1/4” within border

Harlan Technologies reserves the right to reject any advertising which is not in keeping with the publishers standards. Previous acceptance of any ad will not prevent Harlan Technologies from exercising the right to refuse the same advertisement in the future. Advertising orders are subject to the terms on the current rate card. Advertisers assume all responsibility and liability for any claims arising from advertisements and will protect the publisher from same.

Harlan Technologies will position ads in ATVQ at its discretion except in the case of preferred positions specifically covered by contract or agreement.

If, for any reason, the publisher fails to publish an advertisement, it will not be liable for any costs or damages, including direct or inconsequential damages.

Terms: All accounts not pre-paid are billed net 30 days. All accounts over 30 days are billed at 1 1/2% per month. Prompt payment is always appreciated.

RESERVE YOUR SPACE TODAY!
1-800-557-9469

AD RATES

Effective 4-15-99

SIZE	INSERTIONS PER YEAR 1-3	4 up
FULL PG COLOR	$650	$500
FULL PG B&W	$150	$130
(Covers II, III, IV $30 extra)		
(2nd color add $75 per page)		
ADDITIONAL COLORS/PAGE	$75	$75
1/2 H or V	$100	$75
1/4	$80	$50
1/6	$50	$35

Multi-page ads are billed at the combined rate based on frequency.

Covers are reserved for COLOR ads.

All typesetting and layout charges for non camera ready ads will be added.

Amateur Television Quarterly

published by Harlan Technologies
5931 Alma Dr., Rockford, IL 61108
tel (815) 398-2683 fax (815) 398-2688 orders (800) 557-9469
Internet: http://www.hampubs.com email: ATVQ@hampubs.com

The camera that I chose is a Supercircuits PC-79XS. This camera is a 400-line resolution color CCD bullet-style device, with a 4-mm lens. The size is small and the shape is relatively aerodynamic, both important considerations when flying on a hang glider. Because the camera can be mounted at several points on the glider remote from the pilot, such as the keel, the wingtips, or even the nose, I chose to use a camera without audio capability. As such, a relatively decent quality dynamic microphone that I clip on to the inside of my helmet is used for audio input.

Power for the system is provided by two 7.2-volt RC nickel-cadmium battery packs. I rigged up a wiring harness that allows for power from the battery packs to be input to the transmitter and overlay modules, and yet allows for quick and easy access to a charger. Because of the variance in battery voltage (over 16 volts when completely charged), it is necessary to limit the voltage being supplied to the overlay board and to the camera. As such, I placed a 3-terminal 12-volt regulator in the overlay module to power it, and I routed this voltage to a connector located on the enclosure for use by the camera. An external battery could power the camera, but since I have to run a thin coax cable for video anyway, I figured that another coax would be better than the added weight and complexity, especially if the camera is located out towards a wingtip. The battery packs are rated at 1800 mA-hr, with useful life in this application at greater than 2 hours of constant use.

The transmitter board is mounted in a 5.5 x 3.0 x 1.25-inch metal enclosure, and the video overlay board is mounted in a separate, identically sized enclosure. In this way, the system can be flown on vehicles that are more tightly constrained for volume and weight than my hang glider by quickly eliminating the overlay module. The two 7.2-volt RC battery packs are mounted on top of the transmitter module, allowing a short wiring harness. The mounting of the battery packs is done with an eye on safety. Hang gliders can be subjected to considerable stresses in turbulent flight conditions, and it is necessary to allow for flexing and movement of the system, especially when it is mounted directly to the glider frame. Because of this, the batteries are isolated from the metal enclosure by a layer of thin foam rubber

The electronics Package mounting. From the top - battery packs, transmitter module, video overlay module. The initial test flights were done with this package in a harness pouch, but this position is less restrictive for the pilot.

A close-up view of the camera and its' mount. I use a modified still-camera mount, and this particular position is on the glider keel facing forwards. This is the mounting position used for the pictures shown in this article.

and held in place with Velcro ties. The last thing I want is to have a hole worn through a battery pack while I'm several thousand feet in the air, especially with batteries as strong as these are!

The transmitter/overlay/battery unit may be carried in a harness pouch or connected directly to a centrally located portion of the glider frame. My glider and harness are easily set-up to handle either, but I prefer the hardware to be mounted to the glider for ease in running the cables. As such, I have two twelve-foot runs of thin coax running between the camera and the overlay module to provide for the power and video connections. Also, a shorter thin coax is used to provide input for audio from the microphone. The Radio Shack dynamic microphone that I used contains its own battery so no separate power cable is necessary. The microphone has a fairly sturdy clip that I use to attach it to the inside of my full-face helmet, right near my mouth. In this way, wind noise is inherently minimized resulting in good voice-quality audio. These three coax cables are then routed along the glider frame tubes and taped down to prevent them from coming loose in the windstream.

The transmitting antenna should provide as much omni-directional coverage downward as possible, yet must be small for weight and aerodynamic reasons. Also, the antenna must work well when mounted in close proximity to the glider, whose large frame is made of thick aluminum tubing with additional structural support provided by several long steel cables. Initial flight tests were made with a 5/8-wavelength whip antenna sticking out of my harness, mostly for the sake of convenience. Performance with this antenna arrangement was only marginal, with quite a few dropouts experienced. As such, I have constructed a dipole and a dual-dipole, turnstile antenna to experiment with in a wing-mounted configuration. The last time I went flying I attempted to test the latter, but unfortunately I had a failure in my car's power inverter so I couldn't record any video. Too bad – the sun was shining and the thermals were excellent!

Ground reception is achieved with an M2 EB-432 "eggbeater" antenna (with radial reflector option) and a PC Electronics TVC-4G downconverter mounted on a child-size portable basketball pole. This particular antenna was chosen to give good omni-

directional coverage skyward, without the need for manual tracking. The output of the downconverter is fed via coax to a VCR and a 13” portable color TV, usually located in the back of my station wagon.

This set-up (including the transmitting antenna being mounted under the wing) is optimized for environments where the hang glider is flying mostly over the receiving antenna. This is true for several of the flatland airports that I fly from, where my glider and I are towed up to altitude by an ultralight aircraft and then released for soaring. This same configuration will probably work well for most mountain flying as long as the receiving antenna is placed in the landing zone below the flight path of the glider. If it is to be placed relatively high up on a mountain in the launching area, then a different problem comes up. In this type of environment, I might spend a considerable amount of time flying back and forth along the ridge, level with, or even lower than the altitude that the receiving antenna is positioned at. Obviously, this case dictates that the main lobe for reception be mostly horizontal and not overhead. For this type of flying, I have plans to mount a dipole antenna above the wing of the glider on top of the kingpost, and I will try removing the radial reflectors from the bottom of the eggbeater receiving antenna. Also, it might make sense to use a more directional receiving antenna such as a small helix for some flying sites, but I have not had the opportunities to explore this as of yet.

Potential Improvements

Some potential improvements that I would like to eventually get around to experimenting with are listed here –

Do more research on batteries, with an eye towards reducing weight and size. The RC packs I have used here are a substantial fraction of the total system weight, and lighter is always better for a flight system such as this. Try to find a camera lens with more wide-angle coverage for a better field-of-view of the pilot and the terrain below. Possibly try a 2-camera system, with timed, automatic switching between cameras with different mounting positions on the glider. Continue experimenting with different configurations of transmitting and receiving antennas.

Conclusion

But after all this, the questions remain – Does ATV work in this application, and does it provide an enhanced viewing experience to spectators? The answers that I’ve gotten after only a few test flights are definitely yes to both! And if you live in the Mid-Atlantic area of the country, there is no reason why you can’t try to join in on the fun. I fly quite often from airports in central New Jersey and eastern Maryland, so if folks are interested in trying to work a hang glider on ATV (and receive a nice hang glider QSL card!), they can contact me via email at: **johnw39038@aol.com** and we can set up a schedule. I can be towed up to altitudes of around 5000 feet, so reception distances should be fairly decent depending on what transmitting antenna I use. And who knows? Maybe somebody out there in ATV-land will become interested enough in what they see to want to try hang gliding for themselves with a tandem flight…

Appendix

An MPEG-encoded video clip from one of my flights with the Glider-Cam system is available for viewing at the following URL –

http://members.aol.com/johnw39038/main/index.htm
This video, as well as the still photos that are on the website and in this article, were made by digitizing an analog VCR tape with

This image was digitized directly from the analog videotape, and shows me a few seconds after take-off. The tow plane is visible on the horizon. Normally, colors and detail are better presented by the system, but the sky was overcast on this particular day, and it was late afternoon.

the use of an ATI All-in-Wonder video tuner card in a PC. Technical details for the video card and the MPEG encoder software may be found here –

All-in-Wonder Video Tuner Card - ATI
http://www.ati.com
MPEG Encoder Software - Ligos
http://www.visiblelight.com/mall/ligos/index.htp

Further information on the hardware that I used in the Glider-Cam project (including pricing) can be found at the websites provided here –

Transmitter – North Country Radio
http://www.northcountryradio.com
Video Overlay – Intuitive Circuits
http://www.northcountryradio.com
Color Camera – Supercircuits
http://www.scx.com
Downconverter – PC Electronics
http://www.hamtv.com
Receive Antenna – M2 Antennas
http://www.m2inc.com
Transmit Antenna – Pryme Radio
http://www.adi-radio.com
Battery Packs – Radio Shack
http://www.radioshack.com

ATVQ

A view with the overlay off from about 600 feet up. Note the white cables running over my harness. These are the camera power and video lines, as well as the microphone cable, when I was running with the electronics in a harness pouch.

Glider-Cam ATV QSL card. Be the first on your block to get one! (Note: this photo taken with a Canon ELPH camera, NOT the Glider-Cam).

COPY PICTURES FROM SPACE WITH THE TASCO TSC-70 OR THE KENWOOD VC-H1

COSMONAUT PADALKA USES THE TSC-70 ON THE MIR

CLOSEUP VIEW OF THE MIR DOCKING STATION USING THE W4HTB CONTROLLER, KENWOOD TM-V7A, LCD DISPLAY AND THE TASCO TSC-70

LOOK FOR NEW SSTV HARDWARE GEAR IN BOOTH 211 AT THE DAYTON HAMVENTION

TRIDON AM 450 TRANSMITTER 3W - $249.95

TRIDON 2000 TRANSCEIVER 3W - $329.95

TRIDON FM 1200 XMTR 4W - $359.95

TRIDON 2000H TRANSCEIVER 12W - $459.95

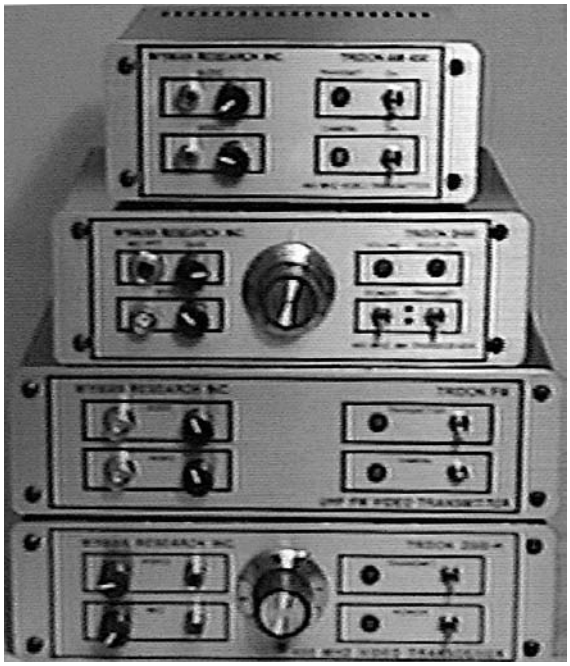

TASCO TSC-70, NO COMPUTER NECESSARY TO WORK TWO WAY LIVE SSTV FROM CAR, AIRPLANE, OR SPACESHIP. CALL FOR SPECIAL PRICE.

WRITE OR CALL FOR A CATALOG DESCRIBING EQUIPMENT THAT WILL PUT YOU ON ATV AT MINIMUM COST. OUR TRANSMITTERS AND TRANSCEIVERS ARE THE MOST POWERFUL AND ECONOMICAL SOLD.

WYMAN RESEARCH INC.

DON C. MILLER, W9NTP
SUE MILLER, W9YL
8339 S 850 W
WALDRON, IN 46182-9644
PH: 765-525-6452
http://www.svs.net/wyman
Email: wyman@svs.net

VISA MasterCard

INDIANA RESIDENTS 5% SALES TAX
SHIPPING $7.00

KENWOOD VC-H1 PORTABLE SSTV UNIT WITH CAMERA PERMITS LIVE SSTV ON THE MOVE. NO COMPUTER NEEDED. CALL FOR SPECIAL PRICE.

Hands up and ready for landing. Altitude here is about 30 feet over a grass runway. The white object to the left is a runway light.

Just For Grins

"Squawks" are problems noted by U. S. Air Force pilots and left for maintenance crews to fix before the next flight. Here are some actual maintenance complaints logged by those Air Force pilots and the replies from the maintenance crews.

(P) = Problem (complaint)
(S) = Solution (reply)

(P) Evidence of leak on right main landing gear.
(S) Evidence removed.

(P) DME volume unbelievably loud.
(S) Volume set to more believable level.

(P) Autopilot in altitude hold mode produces a 200fpm descent.
(S) Cannot reproduce problems on ground.

(P) IFF inoperative.
(S) IFF always inoperative in OFF mode.

(P) Friction locks cause throttle levers to stick.
(S) That's what they're there for.

(P) Number three engine missing.
(S) Engine found on right wing after brief search.

(P) Aircraft handles funny.
(S) Aircraft warned to straighten up, "fly right," and be serious.

(P) Left inside main tire almost needs replacement.
(S) Almost replaced left inside main tire.

(P) Test flight OK, except auto land very rough.
(S) Auto land not installed on this aircraft.

(P) # 2 propeller seeping prop fluid.
(S) #2 propeller seepage normal 1, #3, and #4 propellers lack normal seepage.

(P) Something loose in cockpit.
(S) Something tightened in cockpit.

(P) Dead bugs on windshield.
(S) Live bugs on order.

(P) Target Radar hums.
(S) Reprogrammed Target Radar with the words.

Unipolar Stepper Motor Controller
A PIC Project

by Art Prewitt N4PT email: Aprewitt@prodigy.net
6945 North Wade Road
Tucson, AZ 85743

This project started because I wanted to remotely control a variable capacitor. I was searching the WEB for ideas and motor controllers, when I stumbled across a site about stepper motors. What really got my attention is that these particular stepper motors were salvaged from old 5.25-inch floppy drives.

A quick trip to the junk box and I had two stepper motors at no cost. I also found a couple of stepper motors in an old broken FX85 printer. There is a lot of information on the web as to just how these motors work and how to drive them. I initially started by driving the motors from a parallel port of a laptop. However, I was having a good deal of trouble maintaining the motor timing under windows. I decided this was a good project for a PIC processor. There are some dedicated stepper motor controller chips on the market but I wanted a controller that would drive the motors from a parallel port but also let me experiment with a variety of different motors. I could imagine a number of applications for cheap motors. Remotely adjusting capacitors or resistors or pan/tilt of a camera to name a few.

If you look at these web sites and follow the links there are a number of interesting projects described.
http://www.doc.ic.ac.uk/~ih/doc/stepper/
http://www.doc.ic.ac.uk/~ih/doc/stepper/mount/
I even found one link that had a puppet controlled with stepper motors.

The final controller allows for duty cycle control of the motor. Direction selection, clockwise or counter clockwise. Motor on continuously and up to 255 steps. Two lines select of one of three drive modes, the sequence in which the coils are energized.

The controller uses two integrated circuits, a PIC16F84 and a 555 timer. The timer supplies an almost square wave pulse to RB0 of the PIC. This square wave controls the motor on/off time and the rotational speed of the motor. I found that this timing varies significantly between different motor types. If the timer pulses are too short the motor will stall, if the pulse width is too wide the motor will turn very slowly. This timing also appears to affect the torque of the motor although, I have no way to actually measure the torque.

The motor drive circuit uses TIP120 transistors. This is over kill for the small floppy motors. They seem to draw about 300 Ma. So a UNL2003 could be used for the smaller motors. But the dot matrix stepper motors seem to draw about 1.2 A., which is easily handled by the TIP120's, higher currents would require heat sinks on the TIP120's.

The controller uses a 16F84 running at 10 MHz. 10 MHz was chosen because I had a 10 MHz crystal. There is nothing timing critical here so it should run at almost speed as long as the processor clock is a couple of times greater than the 555 period.

The following is a brief description of the controls signals, refer to the schematic and source code for details.

Contols:

Mode:

The drive mode input is coded as a binary number. For information on the various drive modes see the URL's listed above.

0 0	Two Phase Drive
0 1	Half Step Drive
1 0	Wave Drive
0 0	Does Nothing

Direction:

Low	Counter Clockwise
High	Clockwise

Off/Step:

Motor steps if this is a 1 (high). This was intended to provide continuous motor rotation. There is a little debounce (see code), so it might work with a switch. I have not tried this (See Pulses).

Hold/Release:

The stepper motor will provide holding torque if one or more coils are energized even though the motor is not turning. If this input is 1 (high) holding torque is maintained. Watch the motor current here. Some of these steppers can draw amps.

Pulses:

For each high/low transition the motor will step. This is the TMR0 input so it will accept up to 255 pulses within the period of the 555. Each period of the 555 timer one pulse is completed. There is no provision to detect overflow. Pulse width etc. should conform to the 16F84 input requirements.

Motor connections:

The diagram shows the wire colors for a Japan Servo KPM4-

Do you have these yet?

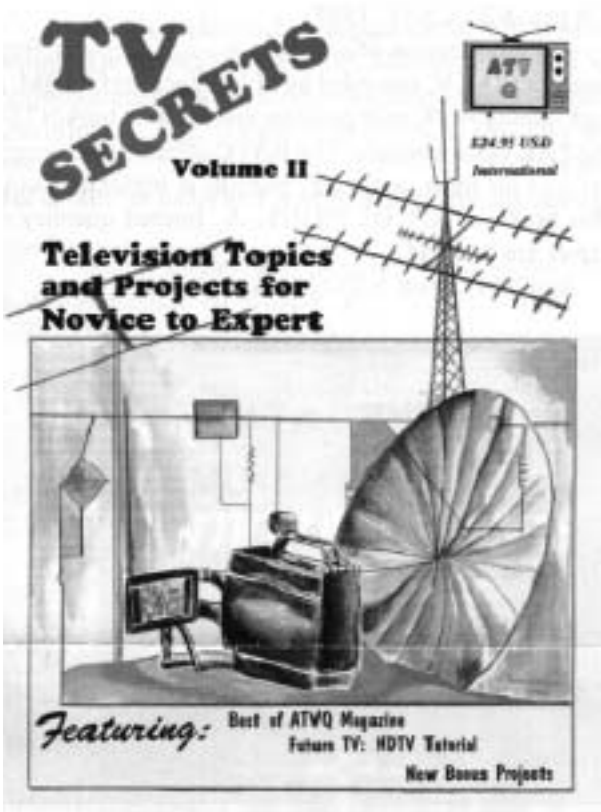

ATV SECRETS
volume one

ATV SECRECTS is a great place to start your ATV adventure. Its 64 pages are are tightly packed with information that covers all aspects of getting started, where to find activity, equipment, how to DX, and answers frequently asked questions of power, antennas, vestigial sideband operation and more. Everything you need to know to enjoy ATV in one place!
$8.95 plus $4.50 shipping

TV SECRETS
volume two

A mammoth book, with 292 pages of technical material. More than 40 authors present over 90 technical projects and theory topics to fully acquaint anyone from novice to expert in the how and what of TV, video, and ham TV. Divided into 11 chapters, the book presents tested projects for all areas of interest in ham TV including antennas, amplifiers, repeaters, receivers, transmitters, video accessories, and more!
$24.95 plus $4.50 shipping

BOTH for only $29.95 plus $6.00 shipping

Just CALL 1-800-557-9469 or write
Harlan Technologies - 5931 Alma Dr. Rockford, IL 61108

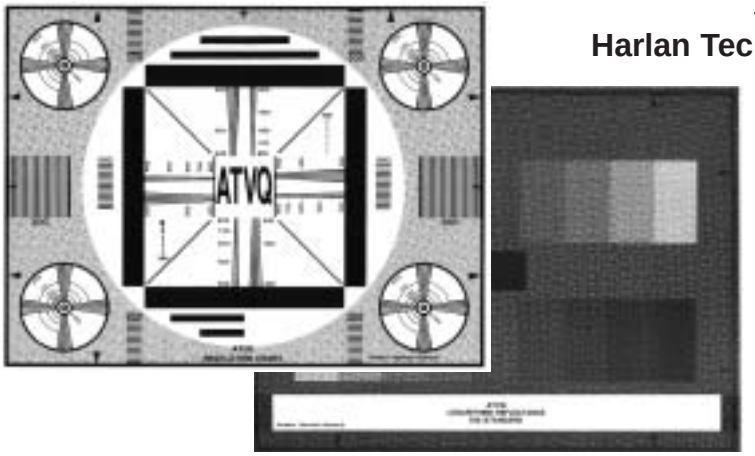

FULL COLOR TEST CHART

4 Charts including COLOR BARS
RESOLUTION
GREY SCALE
REGISTRAITION

ONLY $5.00 plus $3.00 shipping

002. This is the motor that I found in my old floppy drive. This motor is discussed in the URL listed above. It is easy to figure out other motor connections. Trial and error worked for me.

Other:

The controller is driven from the parallel port of a laptop computer. I used a small program written in Delphi to generate the commands for the PIC controller. It was necessary to use a buffer IC between the parallel port and the PIC inputs.

The PIC code was done with the CC5X C compiler running under MPLAB. I like to use C and a restricted version of the CC5X compiler is available free. This compiler integrates directly into MPLAB and makes a very nice development system. I use a homemade Tait style programmer with PICserial programmer software. Cheap!

The C code follows. This is a very simple program but seems to work well. I have also included the ASM file produced by the compiler.

Good luck

```
C Program for Stepper controller
/* StepA C Version 0     */
/* Stepper controller   */
/* A. Prewitt           */
/* N4PT                 */
/* Aprewitt@prodigy.net */
/* Jan 9 2000           */
/* CC5X C Compiler      */
/* NO  WDT              */

#include <16f84.h>                    /* Part of CC5X */

#pragma bit Pulses    = PORTA.4       /* Drives TOCKI a step for each pulse */
#pragma bit HoldIn    = PORTB.3       /* 0= release   1=hold */
#pragma bit StepIn    = PORTB.4       /* 0=NoStep     1=step */
#pragma bit DirIn     = PORTB.5       /* 0=CCW        1=CW  */
#pragma bit ModeLoIn  = PORTB.6       /* 00 = 2ph 01 =1/2step 10=wave 11=nil */
#pragma bit ModeHiIn  = PORTB.7

#define TwoPhase  0
#define HalfStep  1
#define WaveDrive 2
#define NoPhase   3
#define True      1
#define False     0
#define CW        1
#define CCW       0

char Index ;
char Mode ;
char MotorVal ;

bit Dir ;
bit StepDly ;
bit Step  ;

#pragma bit  ModeLo = Mode.0
#pragma bit  ModeHi = Mode.1

char TwoPhase_Tbl(char i )
 /* Two Phase Drive look up table */
{
  skip(i);
  #pragma return[] = 0xc
  #pragma return[] = 0x6
  #pragma return[] = 0x3
  #pragma return[] = 0x9
}

char WaveDrive_Tbl ( char i)          /* Wave Drive Look up Table */
{
  skip(i) ;
  #pragma return[] = 0x8
  #pragma return[] = 0x4
  #pragma return[] = 0x2
  #pragma return[] = 0x1
}

char HalfStep_Tbl(char i)             /* Half Step or Micro Step Look up Table */
{
  skip(i) ;
  #pragma return[] = 0x8
  #pragma return[] = 0xc
  #pragma return[] = 0x4
  #pragma return[] = 0x6
  #pragma return[] = 0x2
  #pragma return[] = 0x3
  #pragma return[] = 0x1
  #pragma return[] = 0x9
}

void main(void)
{
INTCON = 0x10 ;
/*  Enable the INTE Interrupt bit Interrupts not Used */
/*  The INTF Flag is set on each high to low        */
/*   transition of the        555 */
/*  The motor drive is on for 1 period of the 555 */

OPTION = 0x28 ;          /* TOCKI enabled  and Prescaler to WDT */
PORTA  = 0b.00000 ;
TRISA  = 0b.10000 ;      /* RA4 as TMR0 input — RA0 - RA3 as motor Drives */
PORTB  = 0b.00000000 ;
TRISB  = 0b.11111111 ;   /* all B as inputs */
PORTA = 0 ;
INTF = 0 ;               /* Clear ALL */
Index = 0 ;
TMR0 = 0 ;
Mode = 0 ;
MotorVal = 0 ;
Step = 0 ;
StepDly = 0 ;
Dir = CCW ;

do
{
 if (Dir != DirIn )          /* Adjusts Table index if Direction change */
  {
   if (DirIn == CW )
     {
      Index = Index + 2 ;  /*  Ahead 2 table entries */
      Dir = CW ;
     }
     else
     {
      Index= Index - 2 ;    /* Back 2 table entries */
      Dir = CCW ;
     }
  }

 if ( INTF )                 /*  True if RB0 High to Low */
  {
   Step = StepIn & StepDly ;          /* Cheap debounce of the Step input */

  if ((Step) || ( TMR0 > 0 ))         /*Either Step or TMR0 Can move motor */
   {
    ModeLo = ModeLoIn;                /* Get Mode selection */
    ModeHi = ModeHiIn ;
    Mode = Mode & 0x03 ;               /* Make sure mode is 0 - 3 */

    switch ( Mode)                     /* Which mode */
     {
              case TwoPhase:
                  Index = Index & 0x03 ;
                  MotorVal = TwoPhase_Tbl(Index);
                  break ;

              case HalfStep:
                 Index = Index & 0x07 ;
                 MotorVal = HalfStep_Tbl(Index);
                 break ;
```

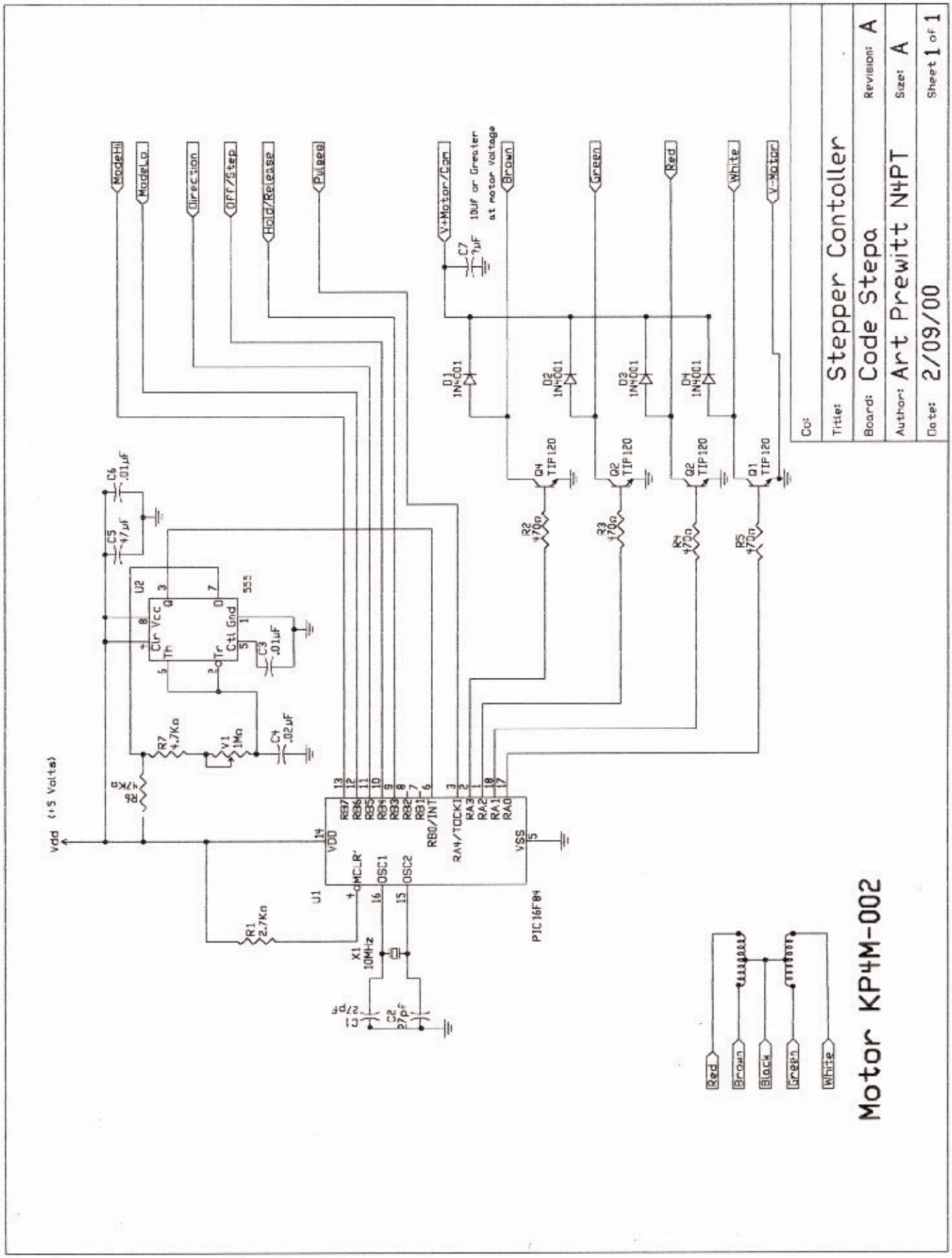
ModeHi
ModeLo
Direction
OFF/Step
Hold/Release
Pulses
V+Motor/Cam
10uF or Greater at motor Voltage
Brown
Green
Red
White
V-Motor
C7 1µF
D1 1N4001
D2 1N4001
D3 1N4001
D4 1N4001
Q4 TIP120
Q2 TIP120
Q2 TIP120
Q1 TIP120
R2 470Ω
R3 470Ω
R4 470Ω
R5 470Ω
C6 .01µF
C5 47µF
U2 555
Clr Vcc Q D
Th Tr Ctl Gnd
C3 .01µF
R7 4.7KΩ
V1 1MΩ
C4 .02µF
R6 47KΩ
Vdd (+5 Volts)
U1 PIC16F84
VDD VSS
MCLR OSC1 OSC2
RB0/INT RA4/TOCKI
RB7 RB6 RB5 RB4 RB3 RB2 RB1
RA3 RA2 RA1 RA0
R1 2.7KΩ
X1 10MHz
C1 27pF
C2 27pF
Red
Brown
Black
Green
White
Motor KP4M-002
Co:
Title: Stepper Contoller
Board: Code Stepa
Revision: A
Author: Art Prewitt N4PT
Size: A
Date: 2/09/00
Sheet 1 of 1

```
            case WaveDrive:
                Index = Index & 0x03 ;
                MotorVal = WaveDrive_Tbl (Index);
                break ;

            case NoPhase:
                break ;
    }
     PORTA = MotorVal ;  /* Send Table value to Motor */

     if (Dir == CW )     /* Adjust Table index for Direction */
       Index++ ;
     else
       Index— ;

     if ( TMR0 > 0 )     /* Was it TMR0 ? */
        TMR0— ;          /* Yep Decrement TMR0 */
     else
        Step = 0 ;       /* No Clear Step */

     }
            else
     {
      if (!HoldIn )      /* No Motor action just 555 timer */
       PORTA = 0 ;       /* Clear the port is No Hold required */
      else
       PORTA = MotorVal ;          /* HOLD Send last value to keep locked */
     }
     INTF = False ;                /* Clear the INTF flag */
     StepDly = StepIn ;            /* cheap debounce of Step */
  }
}
while(True);                                  /* Do Forever */
}
```

ASM Output of Compiler

```
; CC5X Version 3.0E, Copyright (c) B. Knudsen Data
; C compiler for the PICmicro family
; ************   9. Feb 2000  23:27  *************

            processor  16F84
            radix  DEC

TMR0            EQU   0x01
OPTION_REG      EQU   0x81
PCL             EQU   0x02
PORTA           EQU   0x05
TRISA           EQU   0x85
PORTB           EQU   0x06
TRISB           EQU   0x86
PCLATH          EQU   0x0A
INTCON          EQU   0x0B
Zero_           EQU   2
RP0             EQU   5
INTF            EQU   1
HoldIn          EQU   3
StepIn          EQU   4
DirIn           EQU   5
ModeLoIn        EQU   6
ModeHiIn        EQU   7
Index           EQU   0x0D
Mode            EQU   0x0E
MotorVal        EQU   0x0F
Dir             EQU   0
StepDly         EQU   1
Step            EQU   2
ModeLo          EQU   0
ModeHi          EQU   1
i               EQU   0x0C
i_2             EQU   0x0C
i_3             EQU   0x0C

            GOTO main

; FILE D:\HAM\PIC\MPLAB\MPLAB\STEPPER\STEPA.C
;/* StepA C */
;/* Stepper controller */
;/* A. Prewitt */
;/* N4PT   */
;/*  Jan 9 2000 */
;/* CC5X C Compiler */
;
;#include <16f84.h>
;
;#pragma bit Pulses    = PORTA.4      /* Drives TOCKI */
;#pragma bit HoldIn    = PORTB.3      /* 0= release 1=hold */
;#pragma bit StepIn    = PORTB.4      /* 0=NoStep 1=step */
;#pragma bit DirIn     = PORTB.5      /* 0=CCW  1=CW  */
;#pragma bit ModeLoIn  = PORTB.6  /*  00 = 2ph 01 =1/2step 10=wave 11=nil */
;#pragma bit ModeHiIn  = PORTB.7
;
;#define TwoPhase        0
;#define HalfStep        1
;#define WaveDrive       2
;#define NoPhase         3
;#define True            1
;#define False           0
;#define CW              1
;#define CCW             0
;
;char Index ;
;char Mode ;
;char MotorVal ;
;
;bit Dir ;
;bit StepDly ;
;bit Step  ;
;
;
            ;#pragma bit  ModeLo = Mode.0
            ;#pragma bit  ModeHi = Mode.1
            ;
            ;
            ;char TwoPhase_Tbl(char i )      /* Two Phase Drive look up table */
                                            ;{
TwoPhase_Tbl
            MOVWF i
                                            ;  skip(i);
            CLRF  PCLATH
            MOVF  i,W
            ADDWF PCL,1
                                            ;  #pragma return[] = 0xc
            RETLW .12
                                            ;  #pragma return[] = 0x6
            RETLW .6
                                            ;  #pragma return[] = 0x3
            RETLW .3
                                            ;  #pragma return[] = 0x9
            RETLW .9
                        ;}
                        ;
                        ;
                        ;char WaveDrive_Tbl ( char i)  /* Wave Drive Look up Table */
                        ;{
WaveDrive_Tbl
            MOVWF i_2
                                            ;  skip(i) ;
            CLRF  PCLATH
            MOVF  i_2,W
            ADDWF PCL,1
                                            ;  #pragma return[] = 0x8
            RETLW .8
                                            ;  #pragma return[] = 0x4
            RETLW .4
                                            ;  #pragma return[] = 0x2
            RETLW .2
                                            ;  #pragma return[] = 0x1
            RETLW .1
            ;}
            ;
            ;char HalfStep_Tbl(char i)     /* Half Step or Micro Step Look up Table */
            ;{
HalfStep_Tbl
            MOVWF i_3
                                            ;  skip(i) ;
            CLRF  PCLATH
            MOVF  i_3,W
            ADDWF PCL,1
                                            ;  #pragma return[] = 0x8
            RETLW .8
                                            ;  #pragma return[] = 0xc
            RETLW .12
                                            ;  #pragma return[] = 0x4
            RETLW .4
```

```
                                ;  #pragma return[] = 0x6
        RETLW .6
                                ;  #pragma return[] = 0x2
        RETLW .2
                                ;  #pragma return[] = 0x3
        RETLW .3
                                ;  #pragma return[] = 0x1
        RETLW .1
                                ;  #pragma return[] = 0x9
        RETLW .9
                                ;}
                                ;
                                ;
                                ;
                                ;void main(void)
                                ;{
main
        ;
        ;
        ;
;INTCON = 0x10 ;        /*  Enable the INTE Interrupt bit Interrupts not Used */
        MOVLW .16
        MOVWF INTCON
;         /*  The INTF Flag is set on high to low transitions of the 555 */
;         /*  The motor drive is on for 1 period of the 555 */
;
;OPTION = 0x28 ;        /* TOCKI  and Prescaler to WDT */
        MOVLW .40
        BSF   0x03,RP0
        MOVWF OPTION_REG
                                ;PORTA  = 0b.00000 ;
        BCF   0x03,RP0
        CLRF  PORTA
;TRISA  = 0b.10000 ;     /* RA4 as TMR0 input — RA0 - RA3 as motor Drives */
        MOVLW .16
        BSF   0x03,RP0
        MOVWF TRISA
                                ;PORTB  = 0b.00000000 ;
        BCF   0x03,RP0
        CLRF  PORTB
                                ;TRISB  = 0b.11111111 ;    /* all B as inputs */
        MOVLW .255
        BSF   0x03,RP0
        MOVWF TRISB
                                ;PORTA = 0 ;
        BCF   0x03,RP0
        CLRF  PORTA
                                ;INTF = 0 ;             /* Clear ALL */
        BCF   0x0B,INTF
                                ;Index = 0 ;
        CLRF  Index
                                ;TMR0 = 0 ;
        CLRF  TMR0
                                ;Mode = 0 ;
        CLRF  Mode
                                ;MotorVal = 0 ;
        CLRF  MotorVal
                                ;Step = 0 ;
        BCF   0x10,Step
                                ;StepDly = 0 ;
        BCF   0x10,StepDly
                                ;Dir = CCW ;
        BCF   0x10,Dir
                                ;
                                ;
                                ;do
                                ;{
                                ;
                                ;
                                ; if (Dir != DirIn )                          /*
Adjusts Table index if Direction change */
m001    BTFSC 0x10,Dir
        GOTO  m002
        BCF   0x03,RP0
        BTFSC 0x06,DirIn
        GOTO  m003
        GOTO  m005
m002    BCF   0x03,RP0
        BTFSC 0x06,DirIn
        GOTO  m005
                                ;  {
                                ;   if (DirIn == CW )
m003    BCF   0x03,RP0
        BTFSS 0x06,DirIn
        GOTO  m004
        ;     {
        ;       Index = Index + 2 ;             /*  Ahead 2 table entries */
        MOVLW .2
        ADDWF Index,1
                                ;       Dir = CW ;
        BSF   0x10,Dir
                                ;     }
                                ;     else
        GOTO  m005
                ;     {
                ;       Index= Index - 2 ;              /* Back 2 table entries */
m004    MOVLW .2
        SUBWF Index,1
                                ;       Dir = CCW ;
        BCF   0x10,Dir
                ;     }
                ;   }
                ;
                ; if ( INTF )                           /*  True if RB0 High to Low */
m005    BTFSS 0x0B,INTF
        GOTO  m001
        ;  {
        ;
        ;   Step = StepIn & StepDly ;           /* Cheap debounce of the Step input */
        BSF   0x10,Step
        BCF   0x03,RP0
        BTFSS 0x06,StepIn
        BCF   0x10,Step
        BTFSS 0x10,StepDly
        BCF   0x10,Step
                                ;
                                ;
        ;  if ((Step) || ( TMR0 > 0 )) /* Either Step or TMR0 Can move motor */
        BTFSC 0x10,Step
        GOTO  m006
        MOVF  TMR0,W
        BTFSC 0x03,Zero_
        GOTO  m014
                                ;   {
                                ;
                                ;    ModeLo = ModeLoIn;
/* Get Mode selection */
m006    BCF   0x0E,ModeLo
        BCF   0x03,RP0
        BTFSC 0x06,ModeLoIn
        BSF   0x0E,ModeLo
                                ;    ModeHi = ModeHiIn ;
        BCF   0x0E,ModeHi
        BTFSC 0x06,ModeHiIn
        BSF   0x0E,ModeHi
                ;    Mode = Mode & 0x03 ;               /* Make sure mode is 0 - 3 */
        MOVLW .3
        ANDWF Mode,1
                                ;
                                ;    switch ( Mode)          /* Which mode */
        MOVF  Mode,W
        BTFSC 0x03,Zero_
        GOTO  m007
        XORLW .1
        BTFSC 0x03,Zero_
        GOTO  m008
        XORLW .3
        BTFSC 0x03,Zero_
        GOTO  m009
        XORLW .1
        BTFSC 0x03,Zero_
        GOTO  m010
        GOTO  m010
                                ;    {
                                ;               case TwoPhase:
                                ;          Index = Index & 0x03 ;
m007    MOVLW .3
        ANDWF Index,1
                                ;          MotorVal = TwoPhase_Tbl(Index);
        MOVF  Index,W
        CALL  TwoPhase_Tbl
        MOVWF MotorVal
                                ;
                                ;               break ;
```

```
        GOTO  m010
                                ;
                                ;           case HalfStep:
                                ;              Index = Index & 0x07 ;
m008    MOVLW .7
        ANDWF Index,1
                                ;        MotorVal = HalfStep_Tbl(Index);
        MOVF  Index,W
        CALL  HalfStep_Tbl
        MOVWF MotorVal
                                ;
                                ;     break ;
        GOTO  m010
                                ;
                                ;           case WaveDrive:
                                ;              Index = Index & 0x03 ;
m009    MOVLW .3
        ANDWF Index,1
                                ;              MotorVal = WaveDrive_Tbl (Index);
```



```
                                MOVF  Index,W
                                CALL  WaveDrive_Tbl
                                MOVWF MotorVal
                                                ;
                                                ;     break ;
                                                ;
                                ;           case NoPhase:
                                ;
                                ;     break ;
                                ;   }
                        ;     PORTA = MotorVal ;  /* Send Table value to Motor */
m010    MOVF  MotorVal,W
        BCF   0x03,RP0
        MOVWF PORTA
                                ;
                        ;     if (Dir == CW )   /* Adjust Table indexer for Direction */
        BTFSS 0x10,Dir
        GOTO  m011
                                ;       Index++ ;
        INCF  Index,1
                                ;     else
        GOTO  m012
                                ;       Index— ;
m011    DECF  Index,1
                                ;
                                ;     if ( TMR0 > 0 )   /* Was it TMR0 ? */
m012    BCF   0x03,RP0
        MOVF  TMR0,W
        BTFSC 0x03,Zero_
        GOTO  m013
                                ;             TMR0— ;/* Yep Decrement TMR0 */
        DECF  TMR0,1
                                ;           else
        GOTO  m016
                                ;       Step = 0 ;        /* No Clear Step */
m013    BCF   0x10,Step
                                ;
                                ;     }
                                ;           else
        GOTO  m016
                                ;     {
                                ;   if (!HoldIn ) /* No Motor action just 555 timer */
m014    BCF   0x03,RP0
        BTFSC 0x06,HoldIn
        GOTO  m015
                                ; PORTA = 0 ;/* Clear the port is No Hold required */
        CLRF  PORTA
                                ;       else
        GOTO  m016
                                ;       PORTA = MotorVal ;        /* Send last value to keep motor    locked */
m015    MOVF  MotorVal,W
        BCF   0x03,RP0
        MOVWF PORTA
                                ;     }
                                ;     INTF = False ;    /* Clear the INTF flag */
m016    BCF   0x0B,INTF
                        ; StepDly = StepIn ;      /* Poor mans debounce of Step */
        BCF   0x10,StepDly
        BCF   0x03,RP0
        BTFSC 0x06,StepIn
        BSF   0x10,StepDly
                                ;  }
                                ;
                                ;}
                                ;while(True);             /* Do Forever */
        GOTO  m001
                                ;}
        END
```


ATVQ

Basic ATV Questions And Answers

I'm just getting started in ATV and these questions have been on my mind as I have been reading up on the subject:

1) How would one determine the transmitted frequency of an ATV signal? The signal is obviously too wide to measure with a frequency counter; by what methods can the audio and video frequency components be determined?

2) How good a connector are F connectors, assuming that the connector is properly crimped and the connection between the cable and the video device is fixed/stationary and is properly sealed for weather effects (as in connecting an amplifier to a tuner)? From a very layman's point of view, it looks like it can be somewhat constant impedance and mechanically tight.

3) Is there a problem with electrolysis when using aluminum shielded cable for part of a run then using copper braided cable for the the balance of a run? A "run of cable" is relative as I am inclined to think that electrolysis effects would not matter on the distances of either section of cable. How would one minimize/eliminate the effects of electrolysis from occurring?

Thanks in advance.

Kevin K Asato - KC6POB - **kevin.k.asato@worldnet.att.net**

From: C. Turner - **turner@vsat.ussc.com**

In answer to #1
When specifying the frequency of an analog video transmission (true of most analog signals, with the possible exception of FSK) one measures the frequency of the unmodulated carrier. In this case, one would remove any video content and disable or turn off the aural modulator and measure the video carrier. Some frequency counters will happily readout the correct video carrier frequency even if the audio carrier is present (but not at too high of a level.)

If you want to know the frequency of the aural carrier (or carriers, as in the case of most amateur TV am video transmitters) then you will have to find a test point inside the equipment and measure it there. Alternatively, I have used a simple diode detector on a sampling line to form a quick-and-dirty AM demodulator and been able to make a measurement that way (I would get a reading of about 4.5 MHz with that method.) I suppose that if you wanted to go a bit out of your way, you could use a spectrum analyzer, or you could notch the video carrier (and the "unwanted" aural carrier - usually the LSB one) and use a frequency counter to measure the actual on-air frequency...

In answer to #2
F connectors, properly installed, aren't all that bad. I would never use one for transmit, and I would be hesitant to use one before a preamplifier. For patching very strong or already-amplified video around the shack (for going into TV's, VCR, etc.) I wouldn't have too much of a problem. For everyday use where there is a lot of wear-and-tear, an F connector will easily outlast a BNC or TNC connector. These are in situations where an extra db or so of loss is of no importance, though.

In answer to #3

There is really no way to absolutely stop the deleterious effects of connections made with dissimilar metals (such as copper and aluminum, etc.) but you can greatly slow the effect. The number one way to increase longevity is to keep moisture from getting to the joint. Make sure that any joints you have are waterproof, or are in places where moisture will not accumulate (water vapor is much harder to protect against than liquid water, it seems...)

Keeping oxygen away from the joint is also very important. A good gastight crimp goes a long way toward this end.

A handy substance that simplifies both of these tasks is an electrician's anti-oxidant (trade names such as "NoAlOx" and "DeOx" come to mind.) Coating the conductors with this stuff before assembly helps. This is the sort of stuff that the power company uses when making connections (they use aluminum almost exclusively these days!) and it has an indefinite service life if it is reasonably well protected from moisture.

In the case of RF connections, however, you'd want to intelligently go about using this stuff as it is very lossy at RF when it acts as a dielectric.

The aluminum shielded cable has a copper-clad center conductor, so it really only the shield that you are trying to connect. A reasonable application of the anti-oxidant over the shield (but not so much that it will squish out into the dielectric space between the shield and center conductor) works find.

In once instance, where I was in a pinch to interface some RG-8 with some 1/2" aluminum hardline, I just soldered the two center conductors together and insulated/spaced them with some foam dielectric that I had scrounged from some of that hardline. For the shield connection, I smeared some of the anti-oxidant on the outside of the aluminum coax (after removing the "goo", of course) and slid the braid over the aluminum coax (the braid was cut longer than the inner conductor so I could do that) and used some small radiator hose clamps to secure it. The entire mess was then weatherproofed. Well, you know how those "temporary" things become permanent - it has been over 5 years and it has shown no signs of deterioration. What about the impedance mismatch? 50 to 75 ohms? 1.5:1 worst-case (it was better than this) and it was ignored. This was only at 2 meters, though... Would I do this routinely? No, I hope not, but I know that it works.

Clint
KA7OEI

ATVQ

Picture DX Bulletin #47 April 2000

by Danny Van Tricht - ON4VT - email: ON4VT@ping.be
Hulshoutveld 2
B-2235 Hulshout
Belgium
SSTV Website http://www.qsl.net/on4vt

Information this month came from:RV3TH, ON4AGP, SM5EEP, HA5DW, SP5QAC, KE1AC, N7CXI, JA2BWH/1, FRA1AB, M0BSS, VE6GP, ON4PL

AFRICA
6W - SENEGAL 6W1QU, Jean, still remaining active. Mostly seen on 10 and 15 meters
J2 - DJIBOUTI J28NH, Jean, just started up in SSTV. Seen on 10 and 12(!) meters! QSL F5IPW
MM - MARITIME MOBILE RW1ZC/mm is from time to time active in SSTV from a fishing vessel near the West African coast. Very nice pictures!
ST - SUDAN ST2SA still remaining active from time to time. QSL via cba. (so far nothing received)

ASIA
8Q - MALDIVES 8Q7KK, Peter, showed up in SSTV. Thanks to HA5DW, for putting him on the air! QSL via HA2SX!
HL - SOUTH KOREA Still several stations active. HL2KPJ, Vic, is a newcomer.
TA - TURKEY Look for TA7AA, Hasan, active from the Asian part of Turkey.
BV9P - PRATAS The BQ9P dxpedition will operate also SSTV (5-12 April 2000). Operator BV2KI and software donated by Chromapix!

EUROPE
T9 - BOSNIA + HERCEGOVINIA T99C is new in SSTV. Look also for T94MG!
UA - RUSSIA Look for K5OE/UA3T, active on HF and satelite SSTV!

NORTH AMERICA + CARIBEAN
CY9 - ST. PAUL ISLAND One to follow: KE1AC(Henry) will be QRV/CY9 6-10 July 2000! More info later!
KP4 - PUERTO RICO Several stations active here. KP4PTD seen on 10 meters lately!
W - USA KG7BC, Jim in Utah, is planning to set up a new SSTV repeater on 10 meter! More info later!

OCEANIA
DU - PHILIPINNES Look for DU1EGA, Cliff. Worked on 15M in Europe!
FK - NEW CALEDONIA FK8VHM, Eric, seen and worked on 15M SSTV!
9M6 _ EAST MALAYSIA 9M6JY, Stella (YL), is new in SSTV. Her husband is 9M6GY. Seen and worked on 15M SSTV!

SOUTH AMERICA
HC - ECUADOR Catched HC5K, Ted, in PSK mode.
So far he's the only station in Ecuador who is active in SSTV. Did anyone get a QSL from him?

SHORT NEWS

*Please put your callsign on the botton of your picture. Very often you tune in on a picture, missing the start.
*Please if you send me info for this bulletin DON'T ATTACH ANY PICTURES!
This cost me monthly a lot of download time ! When I need your picture I sure will ask for !
*Yes, Mir will be reactivated in voice, packet and SSTV!! Watch 145.985 FM between April 5th and April 10th! Good luck.
*And here a (incomplete) list of HF SSTV repeaters:

-21349 VK6ET
-28660 GI4GTY
-28673 LU5DT
-28690 K3ASI
-28700 ON4VRB
-28900 EA8EE

-MAREX SSTV repeaters : Over the next few months, the MAREX engineering group will be testing the ISS SpaceCam 1 SSTV system on 10 and 2 meters. Both manual and automatic (simplex repeater and beacon) functions will be tested from several sites in the US. The current plan is to use following frequencies : 10 meters - 28.710, 28.720, 28.730 USB 2 meters - 145.550 FM simplex

THIS MONTHS PICTURES: RW1ZC/mm, 6W1QU, HL2KPJ, HC5K, FK8VHM, 8Q7KK

NOTE: NEW EMAIL ADDRESS FOR ATVQ

ATVQ@hampubs.com

NEW WEB PAGE IS:

http://www.hampubs.com

Change of address?? Please notify us before the postoffice does!

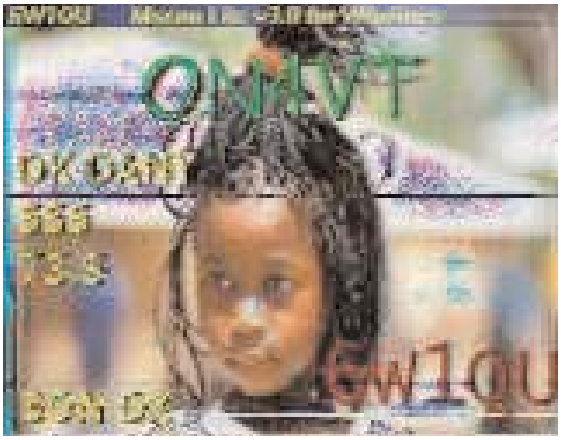

6W1QU

8Q7KK

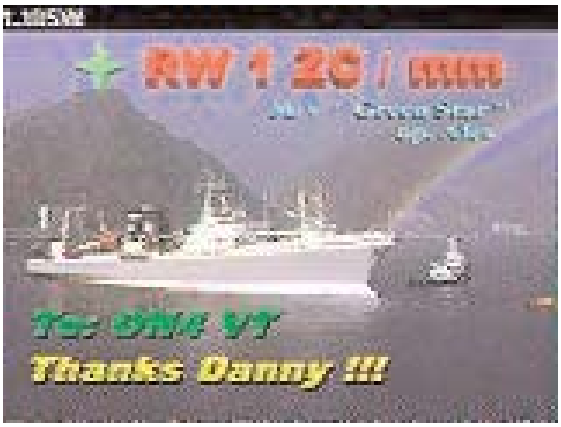

RW12C

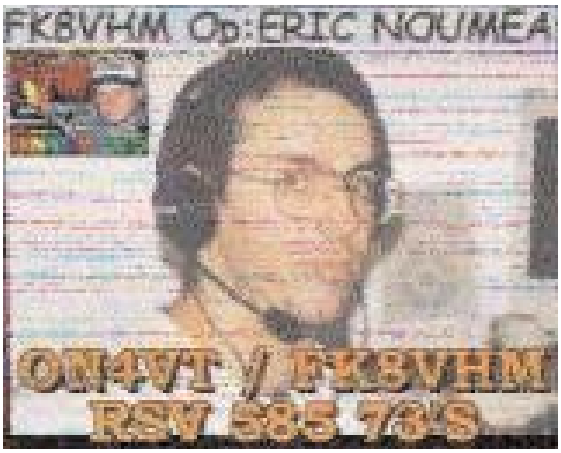

FK8VHM

ON4VRB

HC5K

HL2KPJ

MIKE PRE-AMP FOR THE xl0 VIDEO SENDER

by Louis Hutton K7YZZ - K7YZZ@AOL.COM
12235 SE 62nd St.
Bellevue, WA 98006-4401

After I had finished building the Remote Positioning Controller for my X-10 Video Sender Transmitter as described in ATVQ for Winter 2000, I then designed and built two small microphone/pre-amplifier modules that could be plugged into one of the audio channels on the transmitter. My X-10 Video Sender system did not have the built in microphone that was provided on later versions of the system.

Photo #1 shows the two small pre-amps that I built with the audio cable from the smaller unit plugged into the X-10 transmitter. The larger pre-amp module requires an audio output cable equipped with RCA phone plugs to match the connectors on the module and the X-10 transmitter's audio input. Both modules are powered by a self-contained battery. The larger module is 3 3/16" wide by 2 1/8" deep by 1 3/8" high, a Radio Shack Project Box #270-283. The smaller module is 2" wide by 1 1/2" deep by 3/4" high, a Sescom Inc. LAB-1 aluminum box. Each box has a very small Electret Microphone Element installed in one end. a Radio Shack #RS 270-092. A sub mini slide switch for battery power control RS#275-406 is also mounted in one end of each module.

Photos #2. #3, and #4 show the insides of the two units, I drew up a diagram of the amplifier and glued it inside the lid of the larger module. The other module was just too small to make up a useable wiring diagram to glue to its lid. Both use the same schematic, in the large module I installed a 9 volt transistor battery attached inside the bottom using double sticky tape. A scrap piece of perf board was cut to fit the module and the circuit parts were wired up on the back side of the board

A 6 volt power supply for the small module was made from a modified 9 volt transistor battery. The cell was opened up and two of the bottom layers were removed. The special wiring that brings the voltage from the bottom of the battery out the top was salvaged and re-used. Power leads were then soldered to the top of the battery and to that salvaged bottom wiring connection. The battery was wrapped with electrical tape and fitted into the small module. A perf board was cut to fit in the remaining space in the small module for circuit wiring.

The wiring diagram for a simple single stage NPN transistor (2N2222) audio amplifier was quickly located in my ARRL Handbook in the Solid-State Basics section under Transistor Audio Amplifiers The only change I made in the circuit was to add a 10K voltage decoupling resistor from the B+ over to the DC input line on the Electret Mic Element. When all the wiring was completed I hooked the audio output of the pre-amplifier to my scope, turned on the battery power switch, and spoke into the microphone. Worked just fine with around one volt peak to peak output. I then hooked the microphone audio output line into my X-10 transmitter and found that audio was being transmitted to the X-10 receiver as designed.

If the reader has any questions, I can be reached via e-mail at K7YZZ@AOL.COM.

ATVQ

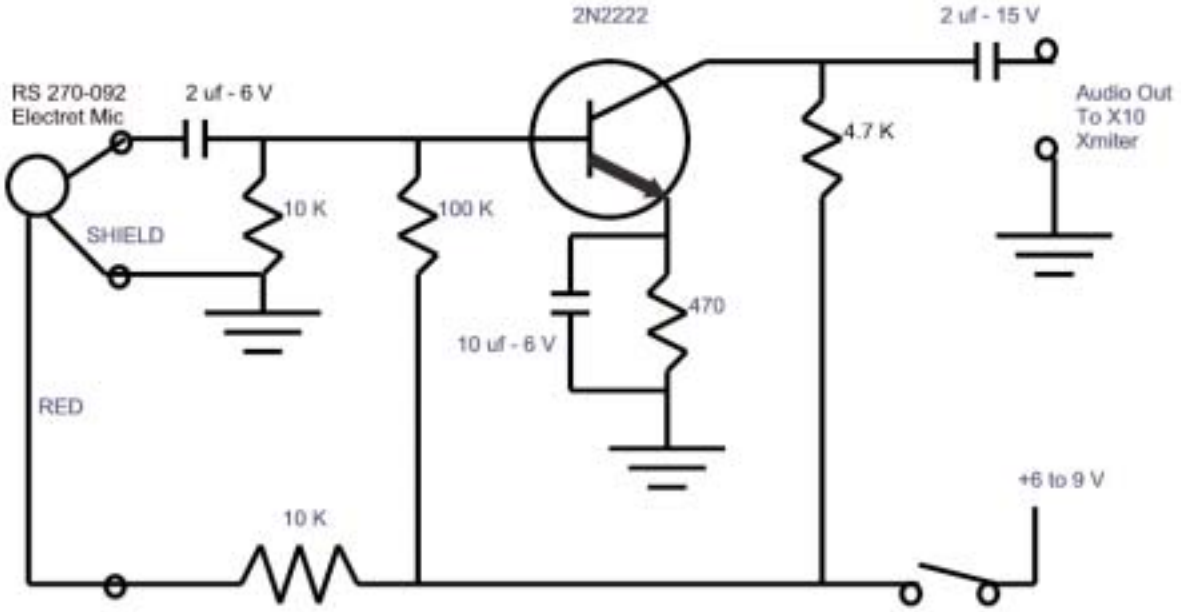

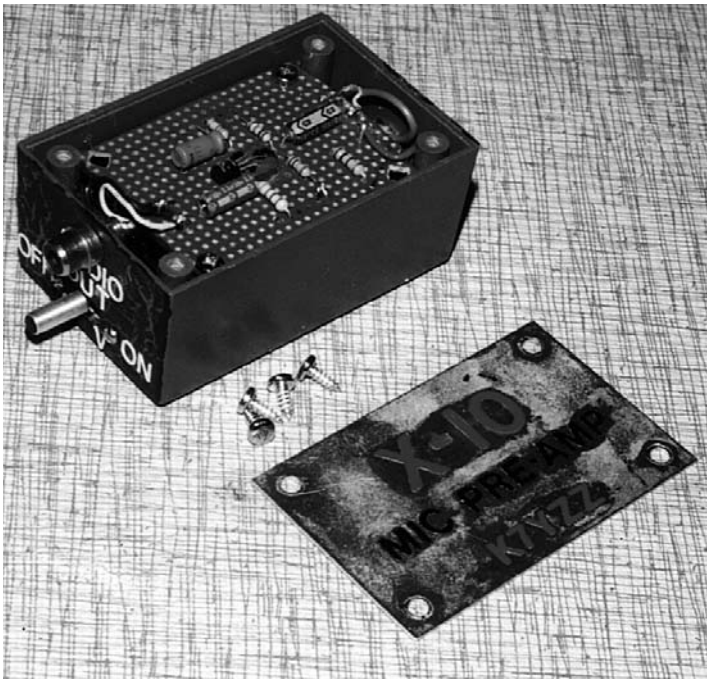

Photo 3

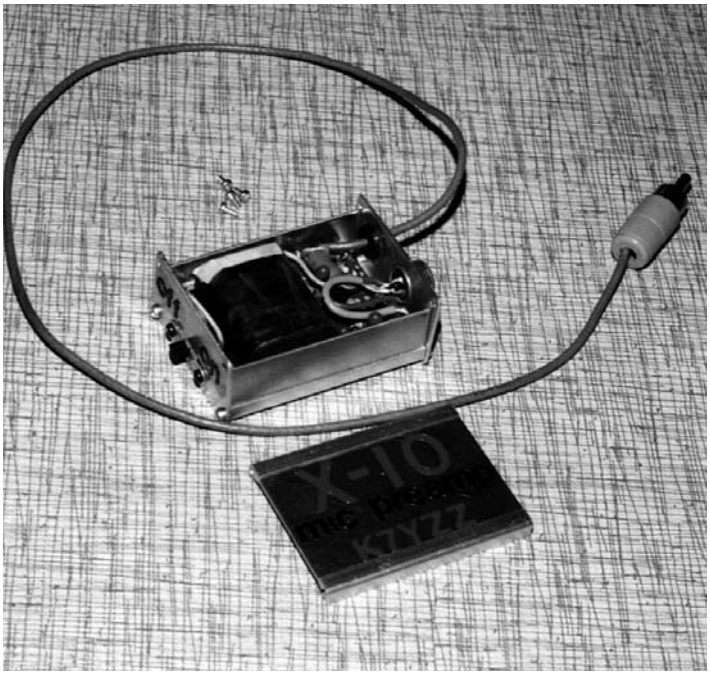

Photo 4

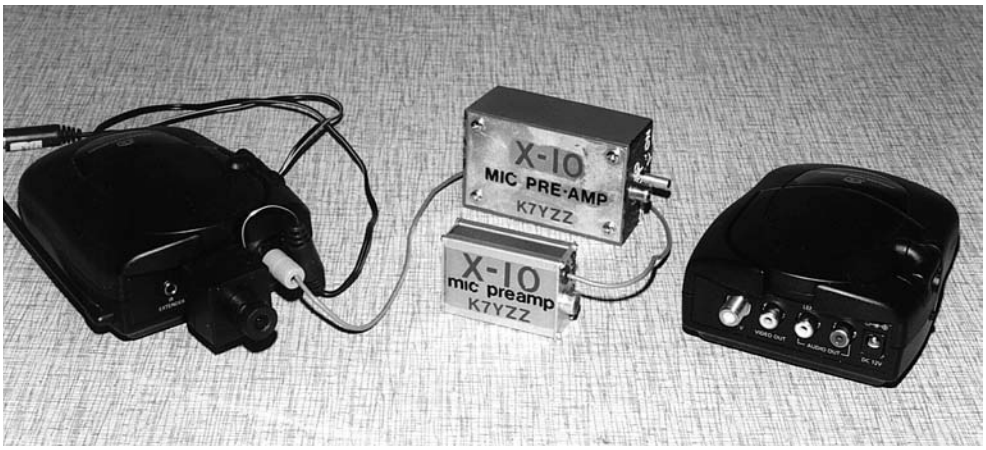

Photo 1

Photo 2

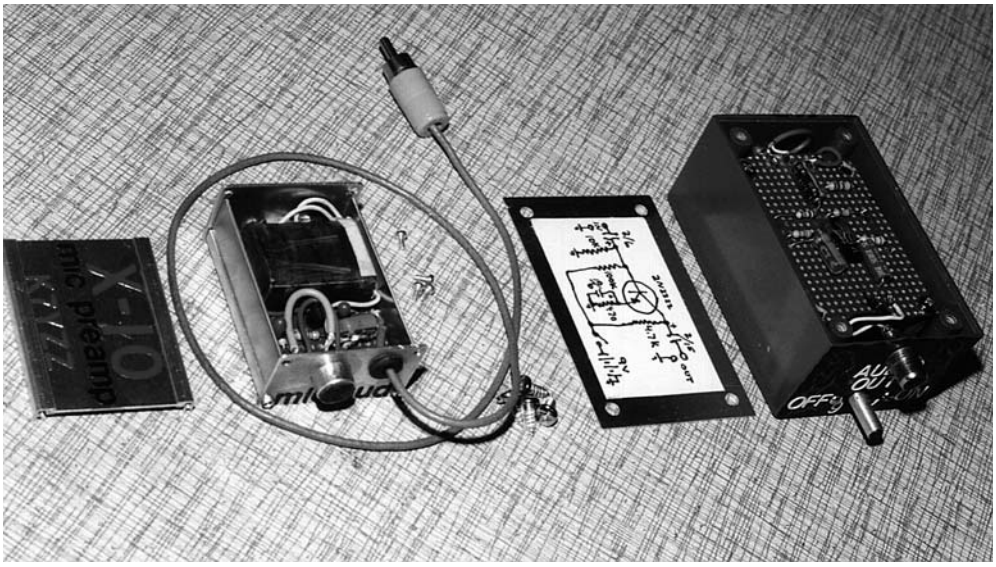

N8NBC Aeronautical Mobile

by Dan Greathouse - N8NBC - Email: dan@ncweb.com
1356 Waverly
Eastlake, OH 44095

CQ ATV'ers, if you're listening on 144.340 and you hear my call "N8NBC aeronautical mobile" I may be somewhere in Ohio flying in an Aerostar 105,000 cubic ft. hot air balloon equipped with an ATV transmitter. My balloon's name is SKYTECH and we're looking to make a few high altitude hot air balloon flights, complete with ATV contacts. I will be flying with the help of a soon to be ham, Bill Thompson, a commercial pilot. Crew will probably consist of Bills' lovely wife and also a great hot air balloon pilot, Kathy Thompson and another beautiful girl, our crew chief Diane Greathouse (KC8EAM) also doubles as my wonderful wife and soul mate.

Our flights will be in Ohio or surrounding states this year. It is going to be great fun taking the old P.C. Electronics (Tom I really need a new one, heheh) ATV transmitter running about 50 watts, antenna hanging about 20 ft under the basket. We should be able to make a few long distance contacts at altitudes ranging up to 10,000 feet.

The times of our flights will be early morning or evenings. The morning flights should take place on Saturday or Sunday about a half hour after sunrise. The evening flights a couple hours before sunset on the weekends usually but don't be surprised to see us up during the week. These times are when the winds are most suitable. The winds should be under 10 mph for a safe flight. We have made several flights before with the transmitter

but none over 5000 feet. Hope to be up on field day with 2 meters like last year, with contacts from Ontario to Western NY from 3000 feet !

If you wish to be on a group mailing for my flights please drop me a line, e-mail address is **n8nbc@ncweb.com**. Let me know if you see me on 144.34 or e-mail. I will try to QSL. Hope to see you too !

ATVQ

1280 MHz LOOP YAGI ANTENNA

by Ted Post - N8KQN - Email: n8kqn@juno.com
1267 Richter Rd.
Columbus, OH 43223

Reprinted from the ATCO Newsletter
Volume 16 Number 4 - October 1999

Ted N8KQN has been busy this summer whipping up yet another antenna for us to consider. Good job Ted. Let's see…I believe Ted's now created an antenna design for each of our ATV bands except 900MHz. The construction of this 1280 MHz one is detailed below.

Each loop can be made from 1/4 to 1/2" wide x .03 thick brass or aluminum. The driven element (DE) must be brass however, so it can be soldered to the bolt and coax as shown. Drill a hole .125 hole .125 from each end and form the piece into a loop. Fasten to the aluminum boom with 4-40 stainless screws. The gain is 8dB if only the first 15 elements are used and 15 dB if all 45 elements are used. The SWR should be less than 1.5:1 at 1280 MHz.

The figure below illustrates the position of the driven element for the desired polarization but should be set for vertical if the ATCO repeater is viewed. The coax used is 1/8" rigid line to connect to the driven element. It can then be adapted to an "N" fitting with a standard hood before connecting to the coax downfeed. Be sure to use the best coax available for the downfeed because of the high losses. 1/2" Heliax is ideal but the absolute minimum should be 9913 and only if a short run is used (50 ft or less).

ATVQ

Element	Space between elements	Element Total length (circumference)
REF#1	0	9 13/16
REF#2	3 1/8	9 13/16
DE	1 7/32	9 13/32
DIR01	1 9/64	8 3/8
DIR02	7/8	8 3/8
DIR03	1 13/16	8 3/8
DIR04	1 13/16	8 3/8
DIR05	1 13/16	8 3/8
DIR06	1 13/16	8 3/8
DIR07	3 27/32	8 3/8
DIR08	3 27/32	8 3/8
DIR09	3 27/32	8 3/8
DIR10	3 27/32	8 3/8
DIR11	3 27/32	8 3/8
DIR12	3 27/32	8 1/8
DIR13	3 27/32	8 1/8
DIR14	3 27/32	8 1/8
DIR15	3 27/32	8 1/8
DIR16	3 27/32	8 1/8
DIR17	3 27/32	8 1/8
DIR18	3 27/32	7 13/16
|	|	|
DIR45	3 27/32	7 13/16

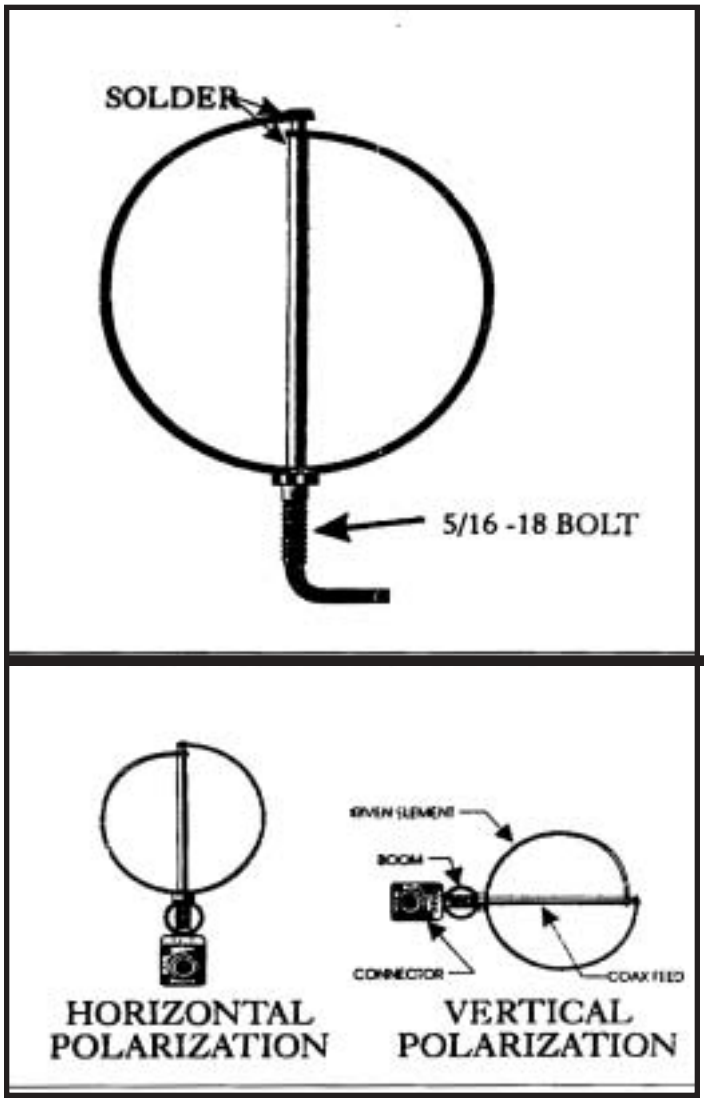

Going to Dayton?

Please stop by booth 361 to say hello. Tell us what you like and what you would like to see in Amateur Television Quarterly and OSCAR Satellite Report.

Tell our advertisers

YOU SAW IT IN

Amateur Television Quarterly

VHF Communications

A Publication for The Radio Amateur Worldwide

- **Articles Covering VHF, UHF and Microwaves**
- **Design, Construction and Testing Information**
- **PCBs and Kits Available**

Four magazines per year, £19.00 cash or £20.00 credit card, including surface mail delivery

For more information or to subscribe – http://www.vhfcomm.co.uk
email - vhfsubs@vhfcomm.co.uk

63 Ringwood Road, Luton, Beds, LU2 7BG, U.K. tel / fax +44 1582 581051

OSCAR Satellite Report

Harlan Technologies
5931 Alma Dr.
Rockford, IL 61108
(800) 557-9469 - Orders
(815) 398-3683 - Voice
(815) 398-2688 - Fax
email: OSR@hampubs.com
Shari Harlan - Editor

http://www.hampubs.com

OSCAR Satellite Report is published for the purpose of enhancing communications about the OSCAR Satellite Program. Subscription rates are $35.00 for USA, $38.00 for Canada, and $46.00 elsewhere (US Funds) per year (24 issues). If you want to hear what others are doing in the satellite community, what DX is being heard, articles for the newcomer to satellite communications, what new satellite software is available, new web sites to visit, Keplerian Element updates, new product news, what satellites are on, off, or being launched, and all other information that a satellite user wants to keep in tune with on a regular basis, you need to subscribe today.

Satellite communications is fun. Keep up to date by subscribing to **OSCAR Satellite Report** TODAY!
_ USA $35.00/Year _ Canada $38.00/year _ Elsewhere $46.00/Year (US Funds)

HAM BOOK CATALOG

ATV Secrets VOL. 1. A 100 page beginners book, non technical, answers all those FAQ's. **$8.95**
ATV Secrets VOL. II. A 300 page technical compendium with everything you need to know about every aspect of ATV and UHF operation. Over 90 technical projects, plus theory and more. **$24.95**

BOTH V1 & V2- $29.95 Shipping **$6.00** for both (USA - Overseas more)

IMPORTED BOOKS:
Slow Scan Explained by Mike Wooding G6IQM. Simply the best book on SSTV around today. **$16.95** (drop ship from BATC)
The ATV Compendium from BATC. A great technical book applicable to UK and US systems **$16.95**
An Introduction to Amateur Television by Mike Wooding G6IQM. Another great technical book with projects useful to UK and US (PAL. NTSC) TV hams. **$16.95**

POSTAGE: 1 book $5.00 (USA - Overseas more)

Many issues of ATVQ are now available on CD ROM. CD 1 contains 1988 & 89 (6 issues), CD 2 contains 1990 & 91 (8 issues), CD 3 contains 1992 & 93 (8 issues), and CD 4 contains 1994 & 95 (8 issues). CD 1 is $19.95 - CD 2, 3, or 4 are $24.95 each plus $5.00 shipping ($6 for two, $7 for three, $8 for all four - Other than USA - higher).

Previous issues still available. The following list shows the issues that are still available at $4.95 each (postage included for USA). I have acquired all the remaining copies from Henry Ruh and Ralph Wilson. If you are interested in just the reprint of an article, please consider purchasing the complete issue. Since I do not have a copy machine in house, going out to make copies will only raise the price higher than the magazine itself. Missing issues are available as photocopies only. Quantities are limited. Some real good articles exist in these issues!

V6 #2 - Spring 1993
V6 #4 - Fall 1993

V7 #1 - Winter 1994
V7 #2 - Spring 1994
V7 #3 - Summer 1994
V7 #4 - Fall 1994

V8 #1 - Winter 1995
V8 #2 - Spring 1995
V8 #3 - Summer 1995
V8 #4 - Fall 1995

V9 #1 - Winter 1996
V9 #2 - Spring 1996
V9 #3 - Summer 1996
V9 #4 - Fall 1996

V10 #1 - Winter 1997
V10 #2 - Spring 1997
V10 #3 - Summer 1997
V10 #4 - Fall 1997

V11 #1 - Winter 1998
V11 #2 - Spring 1998
V11 #3 - Summer 1998
V11 #4 - Fall 1998

V12 #1 - Winter 1999
V12 #2 - Spring 1999
V12 #3 - Summer 1999
V12 #4 - Winter 1999

SUBSCRIPTIONS :

CQ-TV, the quarterly ATV publication of the BATC 1999 rate **$27.00**
VHF COMMUNICATIONS, a super publication from KM Publication in England - **$35.00** (under new ownership)

Amateur Television Quarterly

RATE	USA	CANADA	DX
1 yr.	$18	$20	$26
2 yr.	$35	$38	$50
3 yr.	$50	$56	$75
4 yr.	$65	$74	$100
5 yr.	$80	$92	$125
LIFE	$299	$349	$399

PLEASE NOTE the EXPIRATION DATE on your mailing label. Please re-new early!

NAME:_____
STREET:_____
CITY:_____
STATE:_____ POSTAL CODE_____Country_____
PHONE:_____ HAM CALL_____
VISA/MC/AMEX # _____
EXPIRES:_____ SIGNATURE_____
E-MAIL ADDRESS _____
ARE YOU CURRENTLY ON ATV ? _____ YES _____ NO
ARE YOU CURRENTLY ON SSTV ? _____YES _____ NO
DO YOU USE AN ATV REPEATER ? _____ YES _____ NO
IF SO, CALL OF THE REPEATER _____ LOCATION _____
DOES THE REPEATER HAVE A WEB PAGE ? http:// _____

ATVQ, 5931 Alma Dr., Rockford, IL 61108 - PHONE: 815-398-2683

SUBSCRIPTIONS TO ATVQ 1-800-557-9469

>>FAX 815-398-2688<< >>>> E-MAIL ATVQ@hampubs.com<<<<

NEW BRATS WEB PAGE

The Baltimore Radio Amateur Television Society (BRATS) is pleased to announce our domain name is now in effect: **http://www.bratsatv.org**. We have also been moved to a move powerful server at our ISP so please change your home page links to the new address. Feedback and suggestions are always welcome.

Neil WA3ZQI
BRATS

ATVQ

ATVQ ON CD!

Now you can get past issues of ATVQ from 1988 thru 1995 on CD ROM! We get many orders for past issues of ATVQ because of all the great articles, but unfortunately, we run out of the older issues of the paper copies. The CD ROM copies are scanned in Acrobat PDF format (free reader included on the CD in case you do not have it). Where there were color pictures, we scanned in COLOR with the exception of a few issues that we had to use copies. They really show up nice on your monitor, are very readable, and you can print just the pages of the articles that interest you.

The CD's are organized with two years on each. All except for the first CD have 8 issues on each. The first has two issues from 1988 when it was first published. So many of the articles are still valid. I know I still dig out the antenna articles and many others.

CD 1 contains 1988 & 89 (6 issues)
CD 2 contains 1990 & 91 (8 issues)
CD 3 contains 1992 & 93 (8 issues)
CD 4 contains 1994 & 95 (8 issues)

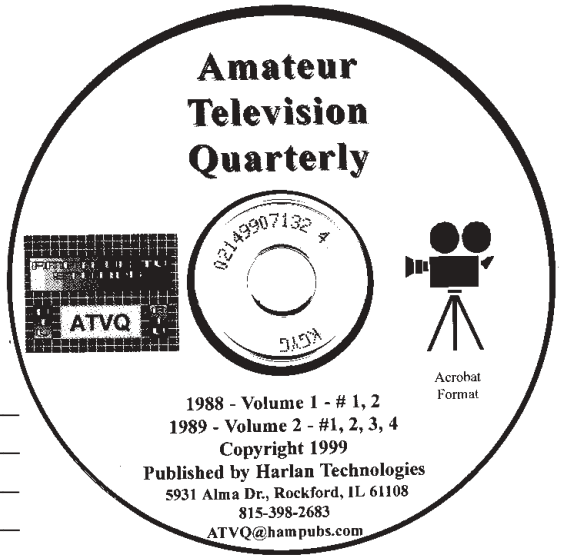

I would like to order the following:
Quantity
_____CD 1 contains 1988 & 89 (6 issues) at $19.95 = $ _____
_____CD 2 contains 1990 & 91 (8 issues) at $24.95 = $ _____
_____CD 3 contains 1992 & 93 (8 issues) at $24.95 = $ _____
_____CD 4 contains 1994 & 95 (8 issues) at $24.95 = $ _____
SUB TOTAL $ _____
TAX if in Illinois - 6.25% $ _____
Shipping - USA $5 / 1 - $6 / 2 - $7 / 3 - $8 / 4 = $ _____
Shipping - Canada or Mexico - add $3 $ _____
Shipping - Elsewhere - add $10 $ _____

TOTAL $ _____
All checks should be in US $ - VISA - M/C - AMEX
Card # _____ Expiration Date _____
Phone # _____ Signature _____

Ship to: Name _____ Call _____
Please Address _____
Print City _____ State _____ Zip/Postal Code _____

ATVQ, 5931 Alma Dr., Rockford, IL 61108 - PHONE: 815-398-2683
ORDER FROM ATVQ 1-800-557-9469
>>FAX 815-398-2688<< >>>> E-MAIL ATVQ@hampubs.com<<<<

Amateur Television of North America(ATNA)

What are you doing to help advance the technology and popularity of ATV operation in your community?

Are you a member of an active ATV club that needs more clout with the local frequency coordinating body?

Do you have questions about the legality of transmitting some specific type of video via ATV?

Do you believe ATV operators interests are being well represented by the ARRL or anyone else?

Who is your liaison to the FCC or local coordinating body for technical ATV related issues?

Who is working to tie together all the regional ATV groups to combine forces for a common cause?

If you aren't doing these things yourself then you need to join us and become a member of the national ATV organization that can provide all of these services and more !

You, and your club can become a member and affiliated member club of Amateur Television of North America (ATNA), the national organization dedicated to the future of Amateur Television in North America. ATNA will be the central focus to promote ATV operations and technological advancement for North America. Among other activities ATNA's members will support ATV presentations at amateur con ventions around the country, including the Dayton Hamvention.

Our Mission:

* Protect our ATV interests and frequencies.

* Use video transmission methods to support public service.

* Plan for the amateur radio adoption of new technology.

* Advance the state of the art of video and video transmission methods.

* Work with National Frequency Coordinators as the official coordinating body for Fast Scan ATV in North America

* Associate in an equal role with other like minded societies

If you want ATV to prosper in North America, please fill out the application on the other side of this form and join us as members of ATNA.

More information about ATNA can be found on the Internet at World Wide Web page http://atna.ampr.org, by email to atna@qsl.net or by regular mail to:

ATNA c/o Harry F. DeVerter Jr., N3KYR 303 Shultz Road Lancaster, PA 17603-9563

Email messages about ATNA operations will be distributed on the following Internet list server atv@atv.tallahassee.net

Please see the instructions on the ATNA web page about subscribing to the ATV Tallahassee list server.

INDIVIDUAL MEMBERSHIP APPLICATION FOR ATNA

NAME _____ CALL_____ (Please Print)

ADDRESS_____CITY _____

STATE_____ZIP_____+_____ E-MAIL _____

TELEPHONE #(____)_____ Please check here if you want it kept private_____

Member of any other ATV club?_____

Select all bands you are active on:
440 Mhz___, Simplex___, Repeater___,AM__,FM__, 900Mhz____, Simplex___, Repeater___,AM__,FM__
1200 Mhz__, Simplex___, Repeater____,AM__,FM__, 2300Mhz__, Simplex___, Repeater___,AM__,FM__
10 Ghz____, Simplex___, Repeater___,AM__,FM__, Other_____, Simplex___, Repeater___,AM__,FM__

Indicate Frequency and check those that apply to you.

Individual membership (USD) $5.00 per year.

Enclosed (USD) $_____for _____ years dues.

Individual membership (USD) $8.00 (Non-North American)

Enclosed (USD) $____for ____ years dues (Non-North American)

ORGANIZATION APPLICATION FOR ATNA

NAME _____CALL_____E-MAIL/WEB SITE _____

ADDRESS_____CITY_____STATE/COUNTRY_____ZIP_____+_____
NUMBER OF ACTIVE MEMBERS _____

ORGANIZATION DUES:

Category "A" Club is 3-9 members and dues are $10.00 per year.
Category "B" Club is 10-24 members and dues are $20.00 per year.
Category "C" Club is 25 members or more and dues are $30.00 per year.

Signature of Applicant_____

Make checks, M.O., etc. payable to:

ATNA C/O Harry F. DeVerter Jr., N3KYR
303 Shults Road
Lancaster, PA 17603-9563

FOR ATNA USE ONLY: ATNA #_____CLUB CATEGORY_____CHECK#_____AMT._____

Membership card sent___/___/___ Certificate sent___/___/___ (ORG. ONLY)

Amateur Television of North America (ATNA).... an update

By John Jaminet, W3HMS, President , ATNA. EMAIL W3HMS@aol.com
912 Robert St.
Mechanicsburg, PA 17055 USA

Perhaps you may say...I have not heard much from ATNA in recent times. That is correct, you have not! So lets briefly review our purpose and mission. The purpose of ATNA is to support video transmission by radio amateurs in North America using radio frequencies.

We have learned that it is not easy to establish and build a national organization almost entirely by EMAIL with only one meeting per year at Dayton. Many officers and most members can not attend the Dayton Hamvention for a variety of reasons. We are also people first and hams second and we just can't give and get the normal face to face feedback human beings seem to need. We in ATNA have learned many things in the last 12 months or so and now I would like to share them with you as reality to guide

ATNA in our future operations:

1. People are very, very, very, busy in their non-radio lives.

2. Stress is higher than ever in the western world.

3. Hobbies and hobby clubs are near the bottom of the personal priority chain for most people.

4. We are all influenced by our American culture of do it faster, better, do more yesterday, etc. This may be productive in a work situation...it is most surely a stress producer in a hobby setting.

5. Long term acceptance of officer responsibility is difficult to obtain because of these factors.

6. ATV'ers are people first with families, jobs, and other higher priorities and commitments first and ATV'ers second. The items above operate in all our lives, like it or not, as they do for others.

7. Building, sustaining, and growing an organization via EMAIL is much more difficult than any of us could have imagined. This is because we have no prior experience with it to define expectations. We are all denied the normal human interaction and discussion /decision speed possible via face-to-face meetings or telephone calls, and misunderstanding can so easily occur. In short guys, EMAIL is great for some actions but as a discussion/debate/decision process it is lousy!

8. For many it seems, long EMAIL messages calling for action seem to look too much like work, may create stress, and absolutely does not get the desired responses. So, please consider this for organizations you are involved with.

9. Short EMAILS addressing a single issue seem to work.

10. Thus my conclusions:

a. ATNA must grow like grass and European buildings...very slowly and very surely.

b. We can expand our rate of growth with new people manning functions or getting renewed commitment from current officers and regular members.

c. Obtaining these new people and/or new commitments may be difficult due to the reasons cited above.

d. Perhaps the HARDEST thing we must do in all of this is to accept that we can't grow at the rate we want....and this is a rate which none of us can personally support for the above reasons. Any one of us can recite a long list of things "they" need to do!

e. We must keep the stress level low for all as we want to make ATNA work as much fun as we can.

f. We may need to ask for more support on specific items....but of course this requires much responsibility on the part of very active officers to do it. This, then, conflicts with the above points giving us a very bad "loop", indeed one of negative regeneration.

Let's look now at something completely away from ham radio, which, relates more very directly to ATV'ers as I see it. There is an excellent book by Dr. Steven R. Covey entitled "The 7 Habits of Highly Effective People". In it he decries the ethic of personality and endorses ever so strongly the ethic of character. He addresses also the notions of dependence and independence, both of which are readily understood. He also endorses the next higher plane of interdependence, which I fear, is where many ATV'ers are not. You can get a great idea of this by going to a symphony orchestra concert as we did recently. What is an orchestra but a grand collection of very talented musicians playing a host of instruments. Yes, a few moments before the maestro appears, they are all playing at once and each musician is playing his own melody. Each musician is fully competent and fully independent ....and the sounds are just dreadful! This sound

would sell no tickets, inspire no one, and uplift not a soul!

It is only when the maestro gives the downbeat that they play together in harmony and interdependently and the audience is lifted by a magnificent piece by, for example, Wolfgang A. Mozart....now that is heaven!

As ATV'ers, I think we need more Mozart and for **us** that is interdependence in sharing responsibility for promoting our hobby.

If a member, please share your offers of help by EMAIL to me, by regular mail to me per Callbook address, or to our ATNA Members List Server (for anyone) at ATNA@qth.net.

If you are not a member, please join **us** and then take the action. As I stated at the outset, we need members serving as officers and taking action in order to prosper.

73, John, W3HMS

Chicago ATV Repeater

The Chicago ATV Repeater has purchased a 10 watt **2.4** GHz transmitter and antenna. It will operate in beacon/repeater output mode. I still have to convert the operating frequency from ITFS to ATV. **Look** for it on **244**1.25 MHz this summer. It will have **200** watts ERP, vertical polarization, AM modulation, so you can receive it with a simple downconverter, A 900 MHz beacon / repeater output mode using horizontal polarization will be operational about mid April. Also, and FM mode output on the **23** cm band with an ERP of 50 watts will be operational by the end of May.

Henry - KB9FO

Unicasting

by Henry Ruhwiedel - KB9FO - Email: KB9FOHAM@aol.com
5317 W. 133rd Street
Crown Point, IN 46307

Forget convergence and paradigms, technology has already passed that point.

You can forget the buzz words of broadcasting, narrowcasting, cablecasting, satellite, DBS, video streaming, webcasting. These are no longer valid. The technology is now at Unicasting. What is Unicasting? Its my word to describe the new information age. Universal delivery via any delivery system in any format, at any time.

Imagine getting home and setting down at your favorite display device. Its no longer a TV set or computer screen. It no longer depends only on telco, cable, DBS, TVRO, off-air signals. It's connected to all of them at once. Your "channel surfing" days are over. You need not pick from what may have been telecast at the moment. That's past history. No I'm not talking about TiVo, although that is a nice product that allows you to record and play TV in non real time.

Unicasting will allow you to repose in front of your display device, and choose any program, any source, any data, from any source and download it at your leisure. You can just as easily watch a Broadway production in multicamera and surround sound as it happens, or have it stored to watch when you have time. You can pick the cameras, or follow the directors picks. If the intermission is too long for you, immediately jump to your favorite episode of vintage TV, or the newscast of your choice. Or switch from the Broadway to the London productions and compare the two. Meanwhile you can watch the first run of a new movie from Hollywood, digitally transmitted to you. Or watch it in a theater, where the playback is direct from Hollywood (or any other studio location) in digital perfection. No film. Want a copy for home? Just insert your movie at home card and it will be there before you are.

Miss your favorite episode of a TV series? No problem, select the program from the network server, and watch it in real time or save it for later. Want two programs at the same time in side by side or PIP display? Even if you don't have a PIP or dual input display, it can be sent to you in that format. Select NTSC, PAL, SECAM, HD, SD and any display format you like no matter where in the world you are.

You want to be a Hollywood producer? Sit back in your home and direct the show from there. Interactive displays will allow you to look at all cameras at once, digital recording direct to editing software let the creative folks edit on the fly as you call the shots in real time. Take 37? Chide the actors and go for take 38. On vacation? No problem, your hotel can reserve a secure performance room for you, just as you might reserve a conference room.

As a program supplier, you want to have 6 billion people watch your program, at any time they choose, and without being able to skip the ads? Program the data stream to prevent ad deletion. Want to survey the audience? Provide interactive buttons on screen and get instant feedback.

Twenty fourth century gizmos? No. Its reality today. All this is possible and in many instances already being done. IBM, Cisco, and other computer giants are already working with product owners to provide huge servers that allow all of the above. Product suppliers can provide simultaneous feeds in real time or on demand across all delivery systems, broadcast, DBS, cable, telco. and any other delivery method. Universal connectivity via Motorola's Blue Tooth system.

With DTV broadcasting, many of the additional information streams may fill portions of your ATSC data stream.
The value of a station may no longer be the commercials you sell, the channel your on, or the on-air commercials you broadcast. It may be the homes you can reach that tally to your signal, and you would get paid directly based on viewer response. If the viewer chooses to buy that new SUV you would get a piece of the sale, or the bananas at the market, or the pay per view movie, or a replay of the soap opera. As a consumer, you may choose to spend 50 cents to view the episode you missed, or sit through the commercials, all gathered and billed to you on a convenient charge card.

Need to sell pet food? The delivery system could channel pet food ads only to pet owners, while non pet owners watch a more generic product. Don't want any commercials? You may be able to simply buy viewing the show for a small sum, sans commercials. Commercials can be directed and divided into any distribution pattern desired by the advertiser. No air conditioning ads for Alaska, no furnace ads for Hawaii unless you request them.

Will all this replace "free" over the air broadcasting? Not likely, but the ability to replicate the same product on multiple delivery systems opens new ways for the product producers to cash in on demand. In some instances it may be direct to consumer, in others, via a delivery vehicle, ie radio, tv, cable, DBS, etc. Now all your favorite programs may be available when you want to see them, not in a programming grid determined by the network. Viewers able to select the same product via different delivery systems will allow them to choose the quality level they want to see at the price they are willing to pay. They may watch the Broadway play as telecast, or buy a self directed version, or HD or SD versions, with or without commercials or intermissions. All playing from the same master server.
Unicasting, coming soon to a room near you. ATVQ

press release
news from...

2WAY 150 TO 350MHz SPLITTER FOR SURFACE MOUNT DESIGNS...PRICE ONLY $14.95

BROOKLYN, NY (FOR IMMEDIATE RELEASE)—Mini-Circuits has unveiled the JSPQ-350, a 2way-90° power splitter/combiner operating in the 150 to 350MHz band with 20dB isolation, 0.5dB amplitude and 1 degree phase unbalance, and very good 1.28:1 in/out VSWR (all typ.). Insertion loss is 0.5dB typical, which is an average of coupled outputs less 3dB. Package height is 0.250" (max.).

These units have started shipping world wide and are priced at only $14.95 each (qty.1-9).

For more information about Mini-Circuits new JSPQ-350 power splitter/combiner, contact:

Mini-Circuits
P.O. Box 350166
Brooklyn, NY 11235-0003
Phone: 718-934-4500
Fax: 718-332-4661
mail: sales@minicircuits.com
Web site: http://www.minicircuits.com

ATVQ

press release
news from...

12V VCO HAS 50 TO 100MHz OCTAVE BAND TUNING. PRICE ONLY $12.95

BROOKLYN, NY (FOR IMMEDIATE RELEASE)—Mini-Circuits has introduced a compact, value priced 50 ohm voltage controlled oscillator. Typically, this 12V, 20mA (max. current) ROS-100 model provides 50 to 100MHz octave band tuning, low -105dBc/Hz SSB phase noise at 10kHz offset, and excellent -30dBc harmonic suppression. The miniature 0.5"x0.5"x0.18" size conserves real estate, and applications include test instruments such as signal generators. Maximum operating temperature range is -55°C to +85°C and low quantity 5 to 49 unit pricing is only $12.95 each.

For more information about Mini-Circuits new ROS-100 voltage controlled oscillator, contact:

Mini-Circuits
P.O. Box 350166
Brooklyn, NY 11235-0003
Phone: 718-934-4500
Fax: 718-332-4661
mail: sales@minicircuits.com
Web site: http://www.minicircuits.com

ATVQ

Do you have product announcements. Please send them to ATVQ!

press release
news from...

RF TRANSFORMERS HAVE 4:1 IMPEDANCE 1.5 TO 600MHz. PRICE ONLY $4.45

BROOKLYN, NY (FOR IMMEDIATE RELEASE)—These broad band TCM4-6T surface mount RF transformers from Mini-Circuits operate in the 1.5 to 600MHz band with 4:1 impedance ratio. Referenced to midband loss (0.6dB typ), insertion loss is 1dB from 3MHz to 350MHz, 2dB in the 2 to 400MHz range, and 3dB band wide when operated within -20°C to +85°C (max.). Open case design has plastic base with solder plated leads, and applications include CATV plus VHF/UHF transmitters and receivers. RF power is 250mW (max.).

Immediately available to ship world wide and priced at only $4.45 each in low quantities of 1 to 9.

For more information about Mini-Circuits new TCM4-6T transformers, contact:

Mini-Circuits
P.O. Box 350166
Brooklyn, NY 11235-0003
Phone: 718-934-4500
Fax: 718-332-4661
mail: sales@minicircuits.com
Web site: http://www.minicircuits.com

ATVQ

press release
news from...

DC TO 5GHz SPDT SWITCH HAS VERY HIGH ISOLATION, VERY LOW PRICE-ONLY $89.95!

BROOKLYN, NY (FOR IMMEDIATE RELEASE)—Mini-Circuits ZASW-2-50DR is a DC to 5GHz connectorized single pole double throw (SPDT) reflective switch incorporating a high speed TTL driver for fast 10nsec (typ) switching speed. Typically, isolation is 75dB at 2GHz, 1dB compression is 19dBm at center band, and maximum operating temperature range is -55°C to +100°C. The switch is ideal for transmitter/receiver isolation and automated switching networks.

Units are immediately available from stock for only $89.95 each (qty.1-9).

For more information about Mini-Circuits new ZASW-2-50DR switch, contact:

Mini-Circuits
P.O. Box 350166
Brooklyn, NY 11235-0003
Phone: 718-934-4500
Fax: 718-332-4661
mail: sales@minicircuits.com
Web site: http://www.minicircuits.com

ATVQ

AMATEUR TV NETWORK
ON THE AIR FROM EVERYWERE
FEBRUARY 2000

President: Moody Law WQ6I

PRESIDENT'S CORNER

It is that time of the year for our annual meeting, renew your membership and participate in discussion about ATV and the network. It is very helpful to the ATN trustees to hear from you at the meeting. This information helps us plan for a network that better meets your needs. ATN has survived the wrath of the 434 MHz jammer. He has been silent sense the FCC sent the pink slip. It should be noted that ATN will not tolerate jamming, or any other gross conduct on any ATN repeater. The network is here for all ATV'ers to use and the trustees and others have spent too much time, money and hard work to let the network fall into ruin.

If any member has a complaint, please contact me or one of the ATN trustees so we can help resolve it. I am excited about the success of several of the ATN links and other projects that have been completed during this last year. We still have a few more projects to be completed soon. I look forward so seeing you at the ATN meeting, 73 Moody WQ6I.

FEBRUARY MEETING

The meeting will start at 12:15 sharp. Saturday February 19th. Location: is 250 Turner Avenue, Guasti CA. Talk in on 146.43 MHz. For those of you who will be renewing membership at the meeting, see Mike Collis WA6SVT before the meeting and at the break. Checks should be made out to Mike, as the bank can't cash checks with the ATN name on it. Brian Miles, WB7UBB, will be bringing some of the 2.4 GHz frequency chips to the meeting and will be set up for changing out the chips if you bring your Wavecom units to the meeting. System reports and membership discussion with the trustees. Swap meet at Cal Poly, Pomona, followed by the ATN breakfast at 10:30 at the Baker's Square Restaurant at the Indian Hill's north off-ramp of I-10, ½ block north on the east side. Show and tell your latest ATV project(s). LA's application for a 2.4 GHz experimental license and ATN's opposition filed with the FCC.

SANTIAGO NEWS

A new 1253 MHz filter was purchased from DCI. It has less loss and stays operating cool. The 2.4 GHz interference has been resolved. It came from two part 15 T-1 carrier links from a building next door. I contacted the owner and he temporarily turned down the power of his 2453 MHz wide band transmitters till he could order a filter for 2473 MHz. I called him last week and he is now transmitting at ½ power on the 2473 MHz link with no QRM. I would like to thank Dave, KA6DPS, who did on the air test during the work day with the part 15 owner to end the QRM as well as the owner is still in business. This ended with a win/win situation.

The 434 MHz jamming interference has been resolved and the perpetrator has received a letter from Mr. Hollingsworth of the FCC Washington DC office. The remote camera for Santiago is ready for install and I will pull the controller soon to add the control interface and make some upgrades to the controller. I will be looking into the vertical sync distortion between the controller and the genlock unit of

Secretary/Treasurer: Mike Collis WA6SVT

the computer. If successful the roll that some of you receive on some pictures should disappear.

I am currently working on the 1253 MHz link transmission system at Jobs Peak that will improve both audio and video into Blueridge. I hope to have it operational with in the next week.

BLUERIDGE

Gary K6IOJ has the camera system just about ready to remount on the hill. The plan is to make the trip this spring when the road opens up. Some improvements in the 2.4 MHz receive antenna and 1253 MHz link receive antenna are planned this spring too.

OAT MT.

Its back up and working better that ever. This fall Mike, N6ESW, and his boys, Dave, KA6DPS, and Mike, WA6SVT, mounted the outside equipment box to the building, moved the 8-foot dish to the new location and put the repeater back on the air. On another trip Ted, K6TED, Bob, K6OHH, and Mike, WA6SVT, made a trip to Oat to optimize the repeater and finish a few items that did not get finished during install trip. Ted and Bob volunteered to help with the maintenance of the repeater. They live in Reseda and can be a big help in Oat operations. Thanks for all the help guys.

SANTA BARBARA

Rod, WB9KMO, reports that 1999 was a good year for improvements for the repeater and we're looking forward to more excitement in 2000. When I announced that we were running only 2 watts average power at the last ATN winter meeting, Bill Smith, KB6MCU, came forward and pledged a four-brick amp for us to use. The amplifier is now in service and we're now at 20 watts average. The good signals we had before are now fantastic and we get usable signals where we had none before. Thanks again Bill!

Mike Collis, WA6SVT, brought up an 8' grid dish, one of the dishes that Doug Roberts, WD6ALD, and his friend Dave from Orange County donated to ATN. Mike also brought up an almost new 8 dipole 434 MHz receive antenna. Mike and I spent the day installing the antennas and receive is much better now. The best signals from Santiago are now P5, and typically we have good pictures with full quieting sound and color. Unfortunately the path is not ideal and we can get some deep fades.

Brian Miles, WB7UBB, helped set up and modify a Wavecom receiver and Mike, WA6SVT, donated a filter and 7/8 Heliax and it is now installed with help from Mike and Dave, KA6DPS. We now have the super clean signals coming down from the repeater. Mike Peddicord, KE6OTM, donated a rack-mounted case for the computer at the repeater site. Thanks to all of you guys who donated time and material to make this repeater much better.

During the year, I installed a video camera on the tower at the site. We

Amateur TV Network continued on Page 50

ATV REPEATER INFO

The following form is for all the repeater owners to fill out so we can keep up to date information available for all ATV'ers. The information is available on the web at the address listed below.

I need someone, preferably the repeater owner, to keep us informed on a regular basis so we can have the ATV information available, especially for the new people that Shari & I get inquiries from saying what is in my area. We really want to help the new ATV'ers as much as we can.

Please advise us of any corrections. I have all of the information in Microsoft Access Database, so it will be easy to keep current. The reason we want the ZIP code of the repeater is so we can plot YOUR repeater on a USA map. I know that some repeaters (on mountains for instance) do not have a zip code, so just give us one as close as you can.

You may download the complete file on the Internet at:

http://www.stevens.com/atvq

The following is the complete form with all the information that I would like to have. Any suggestions for additions will be appreciated.

Repeater Callsign _____ Sponsor Callsign _____
Sponsor (Club or Individual) _____
Repeater City _____ State _____ Zip _____ Country _____ Postal Code _____
Tower/Building Name _____ Coordinated? _____ Linked? _____
Input 1 Freq _____ AM/FM _____ Upper/Lower VSB _____ Polarity H/V _____ Access _____
Input 2 Freq _____ AM/FM _____ Upper/Lower VSB _____ Polarity H/V _____ Access _____
Input 3 Freq _____ AM/FM _____ Upper/Lower VSB _____ Polarity H/V _____ Access _____
Input 4 Freq _____ AM/FM _____ Upper/Lower VSB _____ Polarity H/V _____ Access _____

Output 1 Freq _____ AM/FM ____ Upper/Lower VSB ____ Polarity H/V ___ ERP_____Omni? _____
Output 2 Freq _____ AM/FM ____ Upper/Lower VSB ____ Polarity H/V ___ ERP_____Omni? _____
Output 3 Freq _____ AM/FM ____ Upper/Lower VSB ____ Polarity H/V ___ ERP_____Omni? _____

WX Radar? _____ Nasa _____ Web site http:// _____
Contact person _____ Call _____
Email _____
Address _____
City _____ State ____ Zip _____ Country _____ Postal Code _____
Other information _____
_____
_____

The KD2BD Video Operated Relay

by John A. Magliacane, KD2BD - Email: magliaco@email.njin.net
1320 Willow Dr.
Sea Girt, NJ 08750

Many Video Operated Relay (VOR) circuits have been published in recent years for use in connection with ATV repeater controllers or automatic videotape logging systems. Unfortunately, many of these circuits fail to properly detect certain video signals depending on their signal-to-noise ratio or their picture content. Most designs rely on using an LM567 phase locked loop (PLL) tone decoder chip to detect the presence of horizontal sync energy in a composite video signal, and this alone is probably the greatest cause of the poor performance provided by many of these circuits.

One of the worst approaches to video sync detection has been the design used by a comercial (that is no longer in business) ATV Repeater Controller. This controller couples baseband video directly into an LM567 PLL tone decoder tuned to the video horizontal sync frequency. This approach suffers from a number of shortcomings. First, the LM567 processes all input signals through a limiter circuit. Due to the capture effect, only the strongest component of the baseband video signal fed to the LM567 will make it through the limiter and be processed by the PLL's phase detectors. If the video signal has a high signal-to-noise ratio, and the strongest video component happens to be around 15,734 Hz (for NTSC video), the PLL will reliably detect the presence of the video signal. However, the strongest video component that makes it past the limiter is not always something related to the horizontal sweep rate of the video signal. Depending on picture content, there may be a more substantial component at lower frequencies, such as the vertical sweep rate, and when this happens, the video operated relay fails to reliably detect the presence of the video signal.

Some VOR designs place a 15,734 Hz active bandpass filter ahead of the LM567 so that the PLL only sees video components related to the horizontal repetition rate of the video signal. This significantly enhances the reliability and the sensitivity of the VOR, but there's still another problem. The PLL requires an input signal that is continuous in phase. Since interlaced NTSC video contains 262 and a half video lines per field, such video does not contain phase continuous horizontal sync. As a result, any PLL tuned to the horizontal sweep frequency of an NTSC interlaced video signal will break out of lock at the video field rate (approximately 60 times per second). If the PLL is constantly breaking in and out of lock, it cannot be reliable. A better approach is needed.

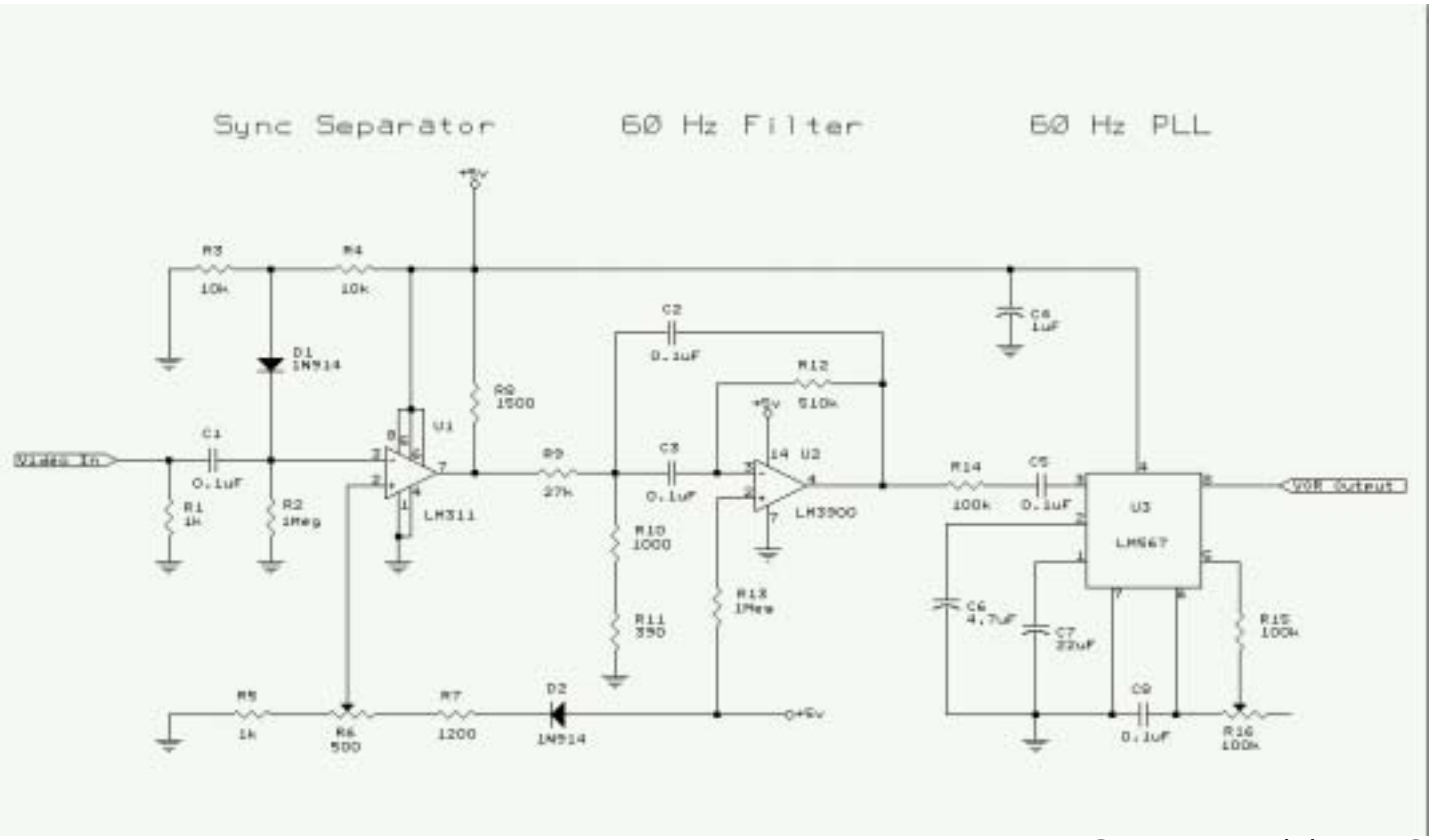

A Better Approach

After much thought, testing, and research, I came up with a different approach to video sync detection. The result of my work is shown in Figure 1. In operation, video signals are clamped to a constant voltage level through capacitor C1, diode D1, and associated resistors R3 and R4. They are then fed into an LM311 voltage comparator that performs the duties of a video sync separator. The purpose of the sync separator is to strip the sync pulses from the video waveform, thereby providing a constant output voltage regardless of the content or the peak-to-peak voltage of the video signal. The extracted sync pulses are then passed along to an active bandpass filter designed around an LM3900 operational amplifier. This filter has a center frequency of 60 Hz, a gain of 10, a Q of 10, and a 3 dB bandwidth of only 6 Hz. Its purpose is to extract only the vertical component of the video sync, which unlike the horizontal component, is phase continuous with interlaced video. The sinusoidal output of the filter is then passed along to an LM567 PLL tone decoder tuned to the vertical sync rate (60 Hz) of the video signal. An open-collector, active low output is available for interfacing with external circuitry.

Design Advantages

Some of the advantages this design holds over others include:

* Excellent PLL stability due to the low frequency (60 Hz) of operation

* Combination of a sync separator and tight filtering ensure sensitive and reliable performance, regardless of picture content

* Use of temperature compensated bias in the sync separator enhances reliability in harsh environments

* Uses standard, low-cost components

* Operates off a single +5 volt DC supply

Circuit Details

The KD2BD Video Operated Relay was constructed on a small perforated circuit board using point-to-point wiring techniques. Potentiometer R6 is adjusted so that the output of the LM311 voltage comparator provides clean sync pulses with a noise-free input signal. R16 is adjusted midway between the points where the PLL goes out of lock. Lock may be determined by tying a 330 ohm resistor and LED between the +5 volt supply and the VOR Output. Capacitor C7 controls the reaction time of the VOR. Any value between 10 uF and 47 uF will work well, although the higher values within that range are preferred to avoid rapid triggering on very weak and noisy signals.

Conclusion

The KD2BD Video Operated Relay represents a slightly different approach to video sync detection, and one that has demonstrated higher reliability than other popular approaches that rely on the presence or absence of energy at the horizontal repetition rate of the video signal.

Conditions of Use

ATVQ

SSTV Activities at the Dayton Hamvention 2000

Saturday - May 20, 2000

Here is the Slow Scan Television (SSTV) program for the Hamvention.

10:45 AM—-12-45 PM Meadow High School

Moderator: Dr. Don C. Miller, W9NTP

Speakers:
Jim Barber, N7CXI,—Slow Scan Television (SSTV)—Today and Tomorrow

Bill Montgomery, VE3EC, SSTV Programs from Silicon Pixels

Miles Mann, WF1F, SSTV in Space

Friday May 19, 2000

6:30 PM IVCA Banquet, Speaker, and Technical Meeting

Howard Johnson Motel
7575 Poe Ave.
Dayton, OH

Banquet tickets will be available in Booth 211 or at the Motel. It is not necessary to attend the banquet to participate in the technical meeting.

Submitted by:
Don C. Miller, W9NTP, **wyman@svs.net**
Slow Scan Television Forum Moderator.

ATVQ

P. C. Electronics **2522** Paxson Lane Arcadia **CA** 91007-8537 **USA** ©2000
Tel: (626) 447-4565 m-th **8am-5:30pm** pst (UTC - 8) Tom (W6ORG) & Mary Ann (WB6YSS) O'Hara
24 hr FAX order line (626) 447-0489 Email: tomsmb@aol.com
Web site: http://www.hamtv.com

ELECTRONICS Mirage Amplifier ATV modifications Revisited

The Mirage D1010-ATV, D100-ATV, D3010-ATV or respective repeater versions all have the modification done at the factory for ATV and all mode amateur radio service. The non-ATV version has a feedback network between the base and collector to prevent low frequency oscillation in the final amplifier transistors. This network, however, will also distort the color, sound and horizontal sync in ATV operation. The modification engineered by **P. C.** Electronics for Mirage in the mid 1980's, simply removes this feedback network consisting of a series .1 mF disc, 10 Ohm resistor and wire wound inductor. However, depending on the age of the amplifier, you need to check to make sure that there is a 50 Ohm 10Watt power resistor connected between the RF output and ground. This will give a 50 **Ohm** low frequency termination but, being wire wound, look like a high value inductor or RFC at 70cm. The resistor will prevent low frequency oscillation when the series feed back networks across the base to collector of the finals are removed. If there is no 50 Ohm 10 watt wire wound power resistor located on the output side of a 200 pF uncased mica cap,, you can get one from Radio Shack (271-133) and solder it in.

The original modifications appeared in the ATV Q and A column by W6ORG in the first quarter of 1989 issue of Amateur Television Quarterly. Amplifiers manufactured after this date have the power resistor and other modifications ***so*** all that is needed to make a standard amp into the ATV version is to remove the series feedback network. Those manufactured before that date need to be visually checked for some added 470 mF, 100 mF **50V** aluminum electrolytic caps and .125V ceramic disc caps. Refer to the schematic. There should be all 3 of these caps in parallel on the +13.8 V line just after the fuse. There are should be 100 mF in parallel with .1 mF disc caps to ground between the RF chokes that feed the bias to the driver and finals and also the collectors. All these capacitors are necessary to keep the bias and collector supply voltages stable and constant during the high peak currant swings at the video modulation rates up to 5 MHz. The 1 pF disc caps at both RF connectors reduced some of the loss by matching our some of the internal coax lead inductance by better than 1 dB. This will help in both transmit and receive. Make the cap leads direct and short at the connectors.

The modifications have no effect on other modes, except maybe to inprove the **SSB** audio envelope linearity. The mode switch should be left in the **SSB** position for ATV ***so*** that the automatic RF T/R sensinng does not drop out or chatter in the case of a very white picture where average power will be low - you may want to increase the delay. This switch has nothing to do with the amplifier bias or linearity. If used at a repeater, you may also want to remove the power leads and replace with a SO-239 connector and bypass with 100pF caps.

Yes, it is absolutely necessary to first make sure that the peak envelope power from your ATV transmitter does not exceed the maximum input power specified for your specific amp before connecting up and follow the set up proceedure on the first page exactly - do not blind tweek or vary the RF drive, blanking pedestal or video gain controls by just watching the picture. You must do the set up procedure as described with a RF power meter - borrow one if you have to - in order to have a stable picture with the proper video to sync ratio and not splatter the band.

DlOlO vs D100. The only difference between these two models is a resistive Pi network attenuator on the input. To make a DlOlO into a D100 if you only have a 1.5 watt pep ATV transmitter, is to simply remove the 3 resistors (two 470 ohm and one 22 ohm 2 Watt) and put a short #18 buss jumper in place of the 22 Ohm 2 Watt resistor. Also note that this changes the maximum input power from 15 watts to 7 watts ***so*** as not to blow the driver transistor. The D3010 **is** the DlOlO without the driver stage.

P. C. Electronics 2522 Paxson Lane Arcadia CA 91007-8537 USA ©2000
Tel: (626) 447-4565 m-th 8am-5:30pm pst (UTC - 8) Tom (W6ORG) & Mary Ann (WB6YSS) O'Hara
24 hr FAX order line (626) 447-0489 Email: tomsmb@aol.com
Web site: http://www.hamtv.com

PC ELECTRONICS

Mirage D1010N-ATV Mod for ATV

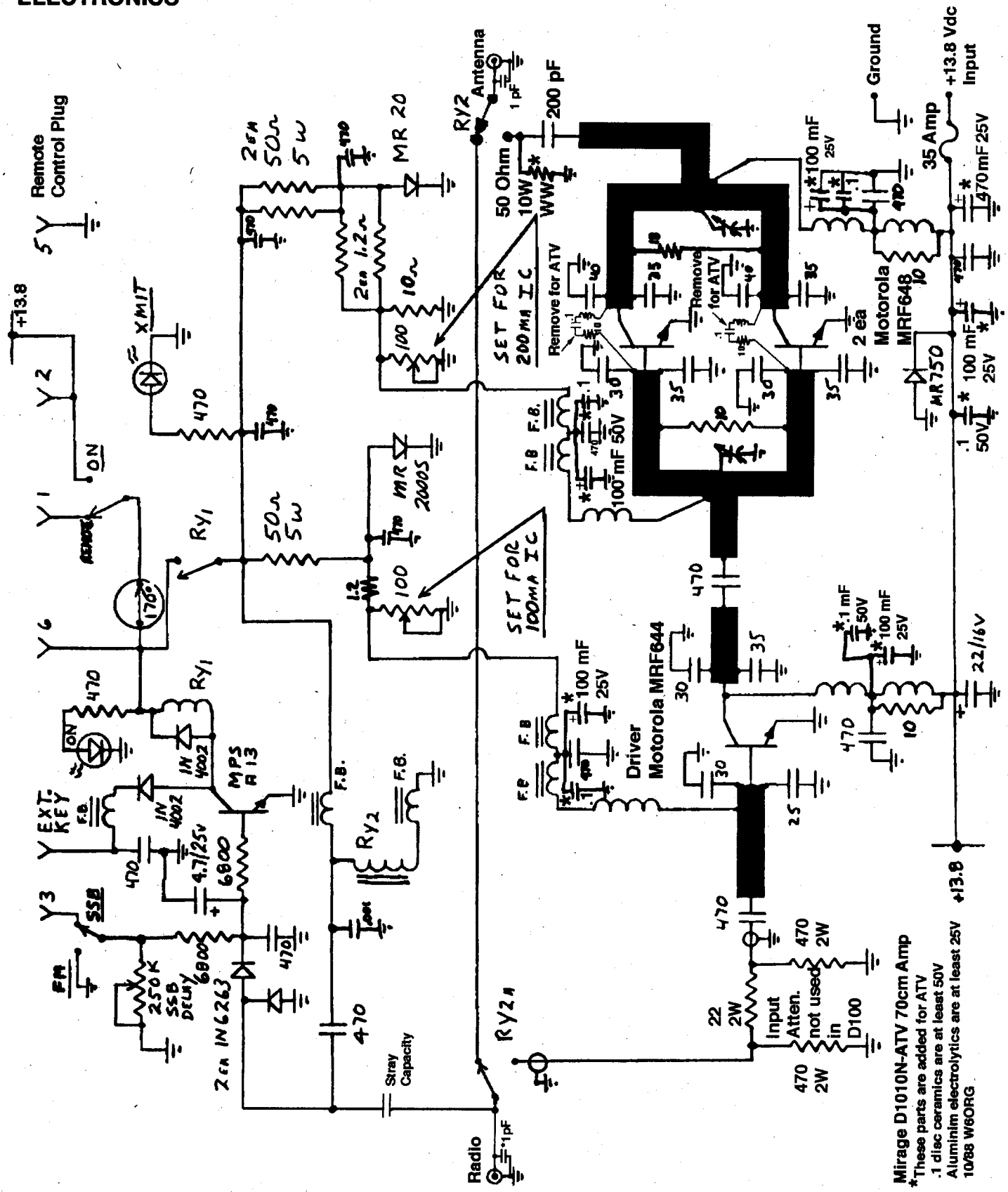

P. C. Electronics 2522 Paxson Lane Arcadia CA 91007-8537 USA ©2000
Tel: (626) 447-4565 m-th 8am-5:30pm pst (UTC-8) Tom (W6ORG) & Mary Ann (WB6YSS) O'Hara
24 hr FAX order line (626) 447-0489 Email: tomsmb@aol.com
Web site: http://www.hamtv.com

ELECTRONICS

THE MIRAGE D1010N-ATV AMPLIFIER ON ATV

ATV all-mode 70cm amplifier from P.C. Electronics has been specially designed to not only work with CW, SSB and FM but also ATV. Despite all mode claims by other manufacturers, few have the proper additional capacitors required for low power supply and bias supply impedance at all video frequencies up to 5 MHz. Without wideband video amplitude modulation in mind when the amp is designed and tested, the result can be color shift, distorted sync and low color and sound subcarrier output.

The D1010N-ATV input power and linear gain curve properly matches the P.C. Electronics KPA5, TC70-1 & TXA5-RC 1.5W ATV transmitters for over 50 Watts p.e.p. or the 10 Watt TC70-10 or TXA5-70/PA5 modules for full output. With 13.8Vdc applied, typical fully driven peak envelope power at the video sync tip plus sound is over 100 Watts. The blanlung pedistal must be set to about 60% (see waveform sketch below) of maximum output to maintain the proper video to sync ratio. Typically this is about 35 Watts out when driven by 1 Watt transmitters and 60 by 10 Watt (3 Watts at pedistal) transmitters. The sync stretcher circuit in the transmitter modulator found in all P.C. Electronics ATV transmitters compensates for the last 3 dB of output change nonlinearity (gain compression) found in most amateur linear amplifiers. The amp FM/SSB switch only affects automatic T/R dropout time, not amp linearity - SSB is normal for ATV.

You must do the setup procedure one time before operation to match your particular transmitter, amp and power supply. Once the blanking pedistal has been set in the transmitter modulator, the proper video to sync ratio will be automatically maintained regardless of camera scene or video gain changes. You need only do the setup again if the applied voltage is changed by more than .5 Volts such as going from a base station power supply set to the nominal 13.8 Vdc to a mobile or portable application where the battery may drop to 12.6 Vdc. Readjustment may also be necessary when changing frequency. The sound subcarrier injection may also have to be reset (decreased).

Do not drive the DlOlON with more than 15 Watts input in any mode or you may damage the amps first transistor. Remember that the sync stretcher will still pull the sync up over 15 Watts output even if you can reset the blanking pedistal low enough without video applied. Excessive drive from any video modulated source will result in a distorted picture. ATV is an AM mode which must have the video waveform preserved by driving each amplifier within its linear range.

Normal all mode duty cycle for the DlOlON is 5 minutes on and 5 minutes off. For ATV it is 10 minutes on since the normal average power is about half the peak power. However this will vary depending on the heat dissipation. Therefore it is best placed where free air can come in from the sides and rise up from the heatsink fins. A fan (Radio Shack has both 12 Vdc and 120 Vac) blowing across the fins will help lengthen the duty cycle a little and life time. Mirage makes a continuous duty version with a much larger heat sink for repeaters. If at any time the thermal relays shut down the amp while in operation, this says that your duty cycle is too long and cooling insufficient. While this protects the amp initially, any repetition can only stress and weaken the parts and PC board in the amp.

The 50R coax between the driver and amp as well as to the antenna must be of good quality and at least 95% shielding. Saxton 8285, Belden 8214 or 9913 are suggested. Take no shortcuts when putting together the coax and connectors as small bumps in the coax line can cause a VSWR (10% reflected max) at UHF and possible stray RF getting into your camera or mic. See the ARRL Handbook for proper connector assembly. Do not use any right angle connectors, and minimize any adaptors or extensions to keep losses down.

SET UP:

1. Connect to its own regulated 13.8Vdc supply capable of 20 Amps. Keep leads short and direct to the power supply.
2. Connect a thruline RF power meter (Diamond SX-1000) capable of reading up to 100 Watts on 70cm at the amp output.
3. With no video connected to the transmitter, turn the pedistal pot for maximum RF output. Set the RF drive pot for 90 Watts. this is your peak envelope power on the sync tip. Next, turn the blanking pedistal pot to 60 Watts.
4. Remove the power meter from the antenna line as it has no further relevance under video modulation. Except for special RF watt meters used by broadcast TV, most RF wattmeters do not read accurate average power with AM modulations above 50 kHz. Your peak (sync) power will be constant at the maximum you read with no video applied and pedistal pot wide open during video modulation due to the modulator pedistal clamp and sync stretcher.
5. Connect up your camera or other video source and have a distant station talk in your video gain level to the point just before white clipping or smearing - don't over modulate and splatter. If excessive crosshatch is noted with color video, the sound subcarrier injection level may also have to be turned down a little.

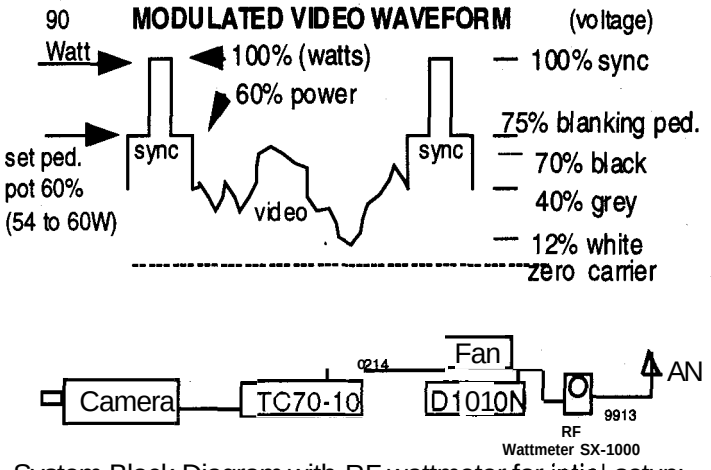

System Block Diagram with RF wattmeter for intial setup:
Antenna must be a resonant 50Q broadband 70cm type such as KLM 440-16X or DS FO25-ATV etc.
Please read the Mirage DlOlON booklet that comes in the bag with the amp, and also fill out and mail the warrenty card to Mirage. If you have any problems call (601) 323-9715, then ship it to them at 300 Industrial Park, Starkville, MS 39757

CIRCUIT CELLAR@

THE MAGAZINE FOR COMPUTER APPLICATIONS

Editorial Director and Publisher Steve Ciarcia has built an international reputation as a consultant, engineer, and author of nearly a dozen books and hundreds of articles. Engineers all over the world have relied on Steve Ciarcia and Circuit Cellar to help them understand and apply leading-edge technology.

At the dawn of the microelectronics revolution in 1978, Steve led the way with Ciarcia's Circuit Cellar, a column that was a favorite in *BYTE* for over ten years. In 1988, Steve saw the need to step up to the challenges posed by ever more complex embedded technologies, and Circuit Cellar magazine was born. Today, with a 12-year track record, *Circuit* Cellar fulfills his vision as a uniquely valuable resource for embedded system designers.

Along the way, Steve has assembled a supporting cast of editors, advisors, and contributors who share his passion for technology and his vision of editorial excellence. Guided by Steve, a superlative staff of technical editors and artists ensure that each copy lives up to the uncompromising editorial quality and integrity that have always been—and will always be—the hallmark of *Circuit* Cellar.

Video Switch Issue 105

Time-Domain Filter Issue 99

Simulations Using C++

Asimov II Issue 113

Getting a Near-Space Project Off the Ground

High-Definition TV Issue 112

Video Formats and Transport

Weather Data Issue 118

Getting More Than One Wire's Worth

Visit us at: **www.circuitcellar.com**

Thanks to all the fine stores that carry Amateur Television Quarterly

Amateur Accessories
P.O. Box 29201
Kansas City, MO 64152

Amateur Electronic Supply, Inc
621 Commonwealth Ave.
Orlando, FL 32803

Amateur Electronic Supply, Inc
1072 N. Rancho Drive
Las Vegas, NV 89106

Amateur Electronic Supply, Inc
28940 Euclid Ave.
Wickliffe, OH 44092

Amateur Electronic Supply, Inc
5710 W. Good Hope Rd.
Milwaukee, WI 53223

Amateur Radio Toy Store
117 West Wesley Street
Wheaton, IL 60187

Austin Amateur Radio Supply
5310 Cameron
Austin, TX 78723

Burnaby Radio Comm Ltd.
4257 E. Hastings St.
Burnaby, BC Canada V5C 2J5

Gateway Electronics
8123 Page Blvd.
St. Louis, MO 63130

Ham Central
3 Neptune Rd.
Poughkeepsie, NY 12601

Ham Radio Outlet
1939 W. Dunlap Ave.
Phoenix, AZ 85021

Ham Radio Outlet
6071 Buford Hwy
Atlanta, GA 30340

Ham Radio Outlet
224 N. Broadway
Salem, NH 03079

Ham Radio Outlet
2492 W. Victory Bl.
Burbank, CA 91506

Ham Radio Outlet
933 N. Euclid St.
Anaheim, CA 92801

Radio City
2663 County Rd I
Mounds View, MN 55112

Texas Tower
1108 Summit Ave. Suite 4
Plano, TX 75074

The Radio Place
5675 A Power Inn Rd.
Sacramento, CA 95824

Do you know of a store that would like to carry ATVQ? Please let us know and we will contact them.

ADVERTISERS INDEX

Please mention that you saw it in
Amateur Television Quarterly!

Amateur TV Network from page 42

call it the "KMO CAM" The view of the coastline is gorgeous. I am forming a net in the Santa Barbara area at 7:30 PM Tuesday night. I hope this will coordinate activities from the ATV special interest group of the Santa Barbara ARC and others in the area. Check in on 146.43 or via ATV. One of these days I hope to get a back link to Santiago so you all can see us. 73 Rod, WB9KMO

SAN GORGONIO

The control system radio has been changed from 224 MHz band to 1.2 GHz on the Santiago input frequency. Moody, WQ6I, purchased the radio and cavity filter. Mike, WA6SVT, installed it.

POTOSI

Geoff, KB7BY, reports that the Las Vegas gang has been busy with maintenance of some of the antennas and some upgrades to the repeater. Most of the group is now receiving the FM output of the repeater and they retire the VSB output soon.

NEWS FROM ARIZONA by Brian Miles WB7UBB

It started a year ago when Beth, KB7WPJ, and I attended the 1999 ATN meeting; a dream was born. Gary (WA9TJV) and I formulated plans to build an ATV repeater for the East Valley, Phoenix Arizona. We started collecting information from Tom (W6ORG) and Mike (WA6SVT), modules and parts. Assembly started at my QTH with rack-mounting the goodies. Gary built some impressive filters and antenna reflector-mount (code-named the lightning rod). Mike, WA6SVT, was in town visiting family and came over and helped with final install and testing.

The call is WB7UBB, Arizona Amateur TV Society. Our output is 1277.25 VSB. Inputs are 434 AM and 2421 FM with 6 MHz subcarrier. Our long-term goal is to build to the west and some day connect to the ATN in California. The president of our club is Tom Sallet, KE7QK. Our net is Tuesday at 8PM on 146.43 MHz and the ATV repeater. E-mail wb7ubb@home.com

ATVQ

ATV RFI Filters

Custom tuned to your video carrier frequency

Improve your picture quality by reducing interference from pagers and other sources of RF near your reception frequency. On transmit, your signal bandwidth will be reduced so you don't interfere with other services.

DCI bandpass filters are solidly constructed from extruded aluminum and brass. DCI filters are passive and can be used in both the TX and RX pass. They are DC grounded on both inputs and outputs for additional lightning protection. Power rating is 200 watts for a 6 MHz bandpass.

Configuration	8-pole In-line	8-pole Folded	8-pole Rack-mount
Weight (approx)	12 lbs.	12 lbs.	14 lbs.
Dimensions (inches)	24 x 3 x 8	12 x 6 x 8	19 x 6 x 8

The graphs below show the characteristics of a typical DCI 8-pole ATV filter with a video carrier frequency at 433.25 MHz. We make similar filters for 900 and 1200 MHz.

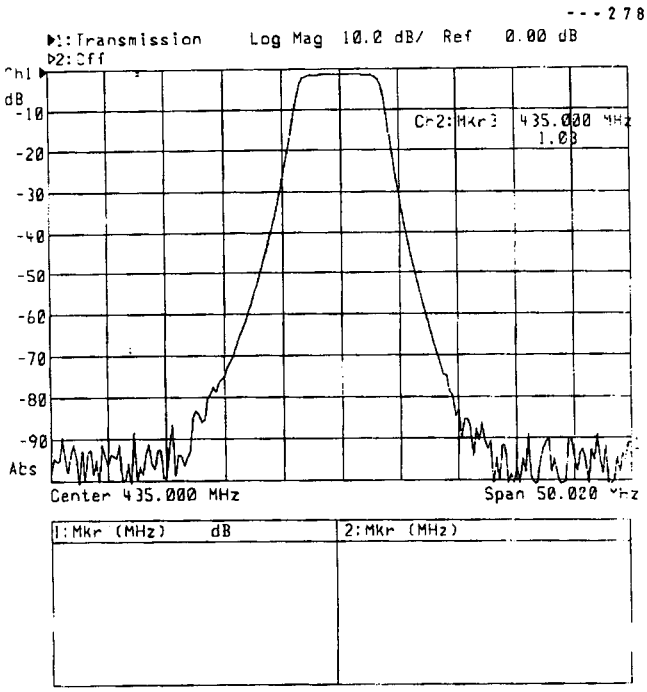

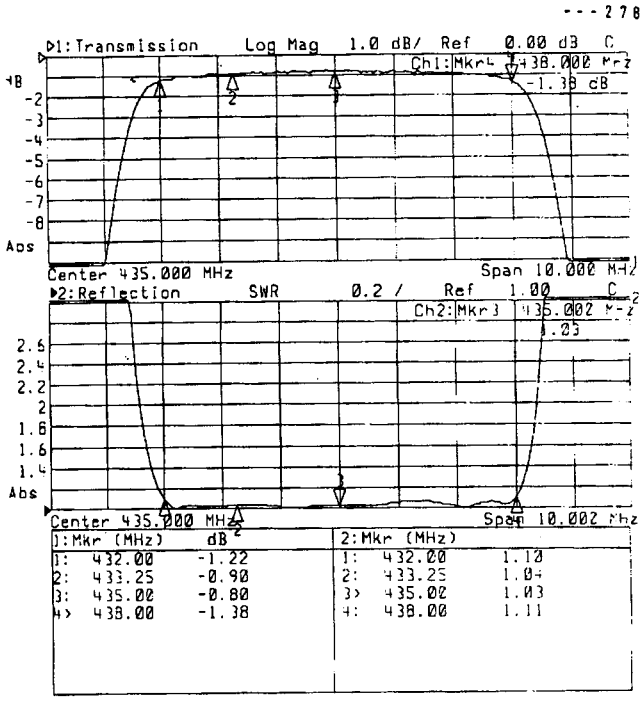

DCI DIGITAL COMMUNICATIONS INC.

Box 293, 29 Hummingbird Bay
White City, SK, Canada
S0G 5B0

(306) 781-4451 voice
(306) 781-2008 fax

email: dci@dci.ca
http://www.dci.ca

21ST CENTURY ATV PRODUCTS

Great building-blocks for Amatuer Television Applications

Cam-Link

Latest Wavecom-type
2.4 Ghz Wireless Systems

LCD Monitors to 18"

Quarter-Sized Single Board Color Cameras

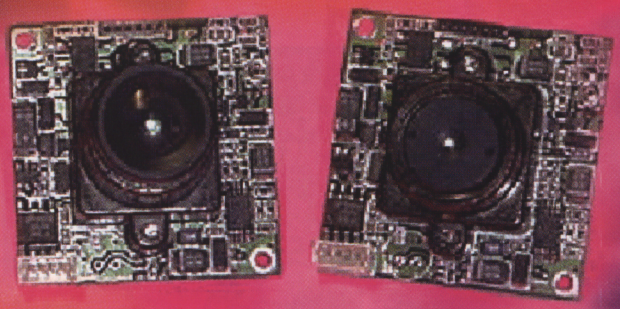

CALL FOR THE NEW 2000A CATALOG

Dozens of Cameras - Hundreds of other ATV items!

Wireless 2.4 Ghz Camera-Monitor Systems

Cmos Cameras

Serving Amateurs since 196

ATV Research *Inc.* **1301 Broadway, Dakota City, NE 68731**
Phone: (800) 392-3922 or (402) 987-3771